SAMSUNG CONFIDENTIAL
THIS DOCUMENT CONTAINS CONFIDENTIAL
PROPRIETARY INFORMATION THAT IS
SAMSUNG ELECTRONICS CO'S PROPERTY.
DO NOT DISCLOSE TO OR DUPLICATE FOR OTHERS
EXCEPT AS AUTHORIZED BY SAMSUNG.

SM-M305M_REV03_SWA_

2019.02.12

sheet01 : GSM / WCDMA / LTE RF
sheet02 : TRANCEIVER, DRX
sheet03 : SENSORS, DMB, CONNECTIVITY
sheet04 : LASSEN O+(EXYNOS7904)
sheet05 : PMIC(Main,IF), KEY, MOTOR, eMMC, IF CON
sheet06 : AUDIO, SD/SIM, SHIELD CAN
sheet07 : CAMERA, DISPLAY

Engineer:			
Drawn by:			
R&D CHK:	TITLE: SM-M305M		Size:
DOC CTRL CHK:			
MFG ENGR CHK:			
Changed by: user93	Date Changed:	Time Changed:	QA CHK:
REV	Drawing Number:		Page: 0

SAMSUNG CONFIDENTIAL
THIS DOCUMENT CONTAINS CONFIDENTIAL
PROPRIETARY INFORMATION THAT IS
SAMSUNG ELECTRONICS CO'S PROPERTY.
DO NOT DISCLOSE TO OR DUPLICATE FOR OTHERS
EXCEPT AS AUTHORIZED BY SAMSUNG.

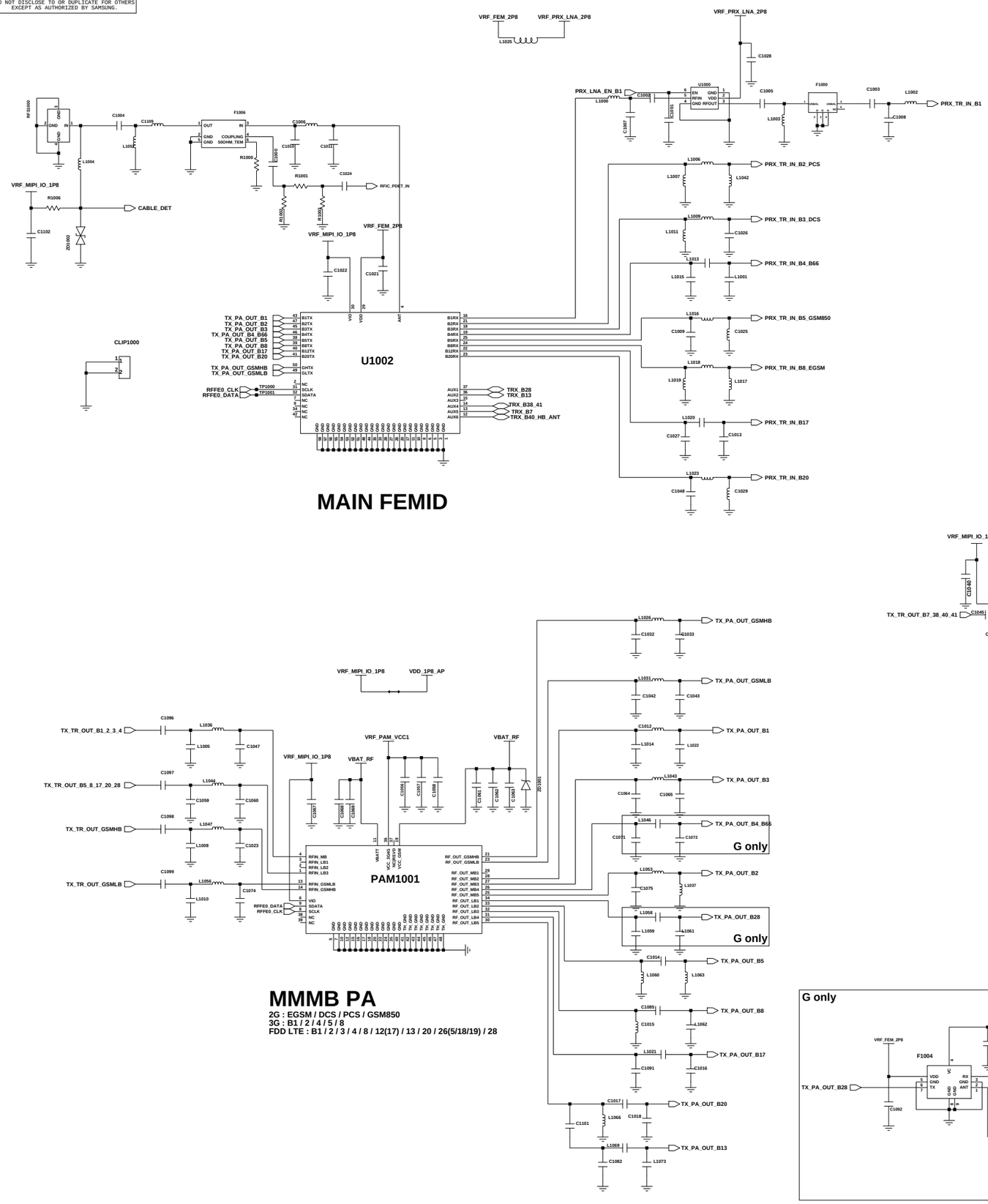

Engineer:	SAMSUNG ELECTRONICS
Drawn by:	
R&D CHK:	TITLE: M30_RF
DOC CTRL CHK:	Size: 16 1 12 A
MFG ENGR CHK:	
QA CHK:	REV: Drawing Number: Page:

Changed by: user | Date Changed: Monday, April 23, 2018 | Time Changed: 8:49:04 pm

SAMSUNG CONFIDENTIAL
THIS DOCUMENT CONTAINS CONFIDENTIAL
PROPRIETARY INFORMATION THAT IS
SAMSUNG ELECTRONICS CO'S PROPERTY.
DO NOT DISCLOSE TO OR DUPLICATE FOR OTHERS
EXCEPT AS AUTHORIZED BY SAMSUNG.

DRX

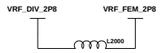

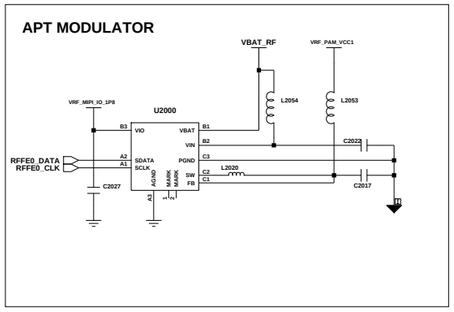

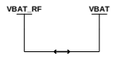

GND

APT MODULATOR

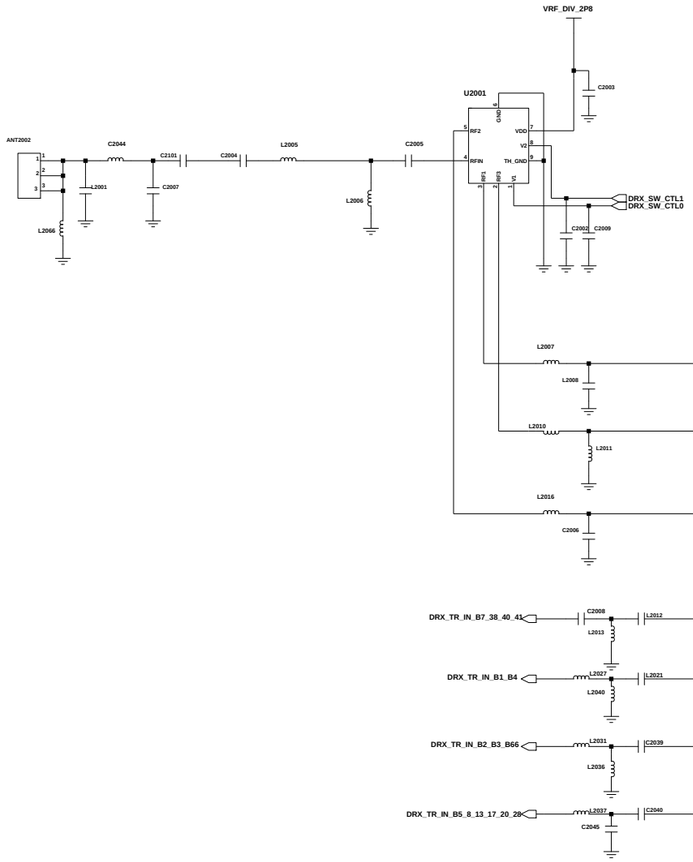

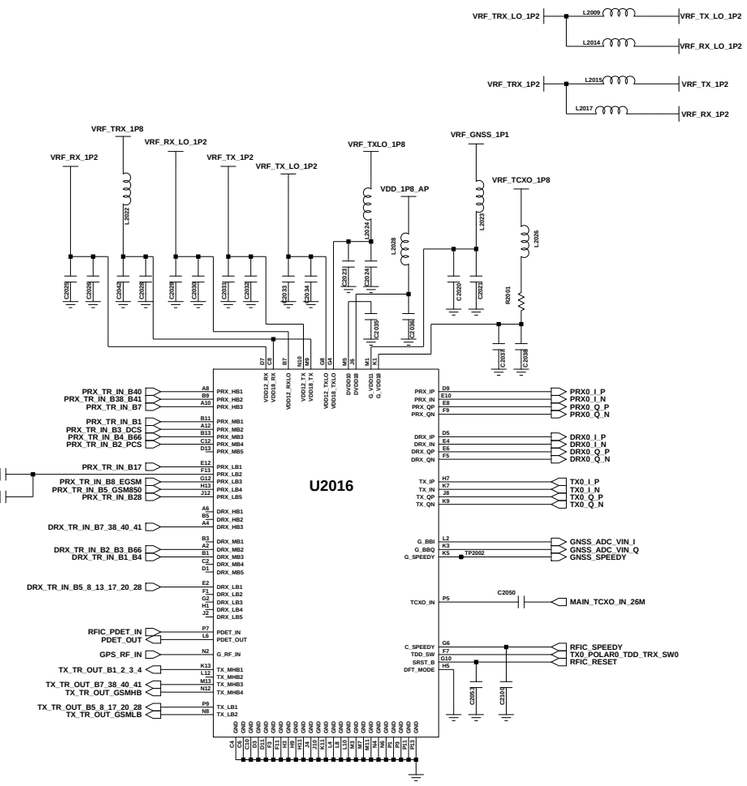

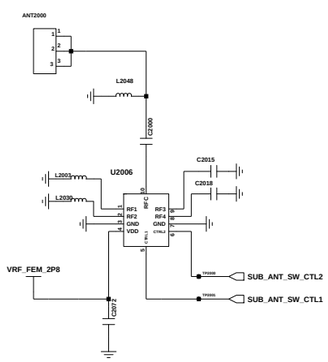

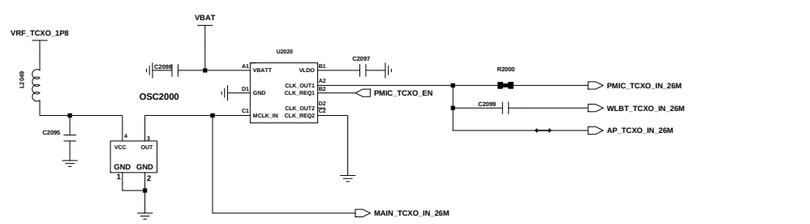

TRANCEIVER

Engineer	DRX, TRANCEIVER		
Drawn by:			
R&D CHK:	TITLE:	Size:	
DOC CTRL CHK:	SM-M305M		
MFG ENGR CHK:			
Changed by: / Date Changed: / Time Changed: / QA CHK:	Drawing Number	2/7	

SAMSUNG CONFIDENTIAL
THIS DOCUMENT CONTAINS CONFIDENTIAL
PROPRIETARY INFORMATION THAT IS
SAMSUNG ELECTRONICS CO'S PROPERTY.
DO NOT DISCLOSE TO OR DUPLICATE FOR OTHERS
EXCEPT AS AUTHORIZED BY SAMSUNG.

BT/WIFI

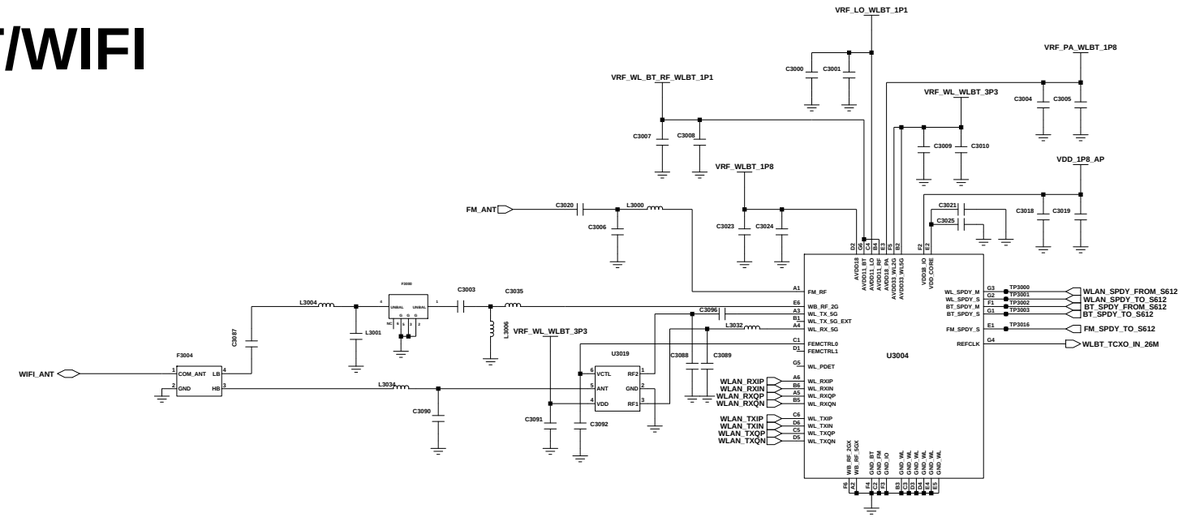

NFC

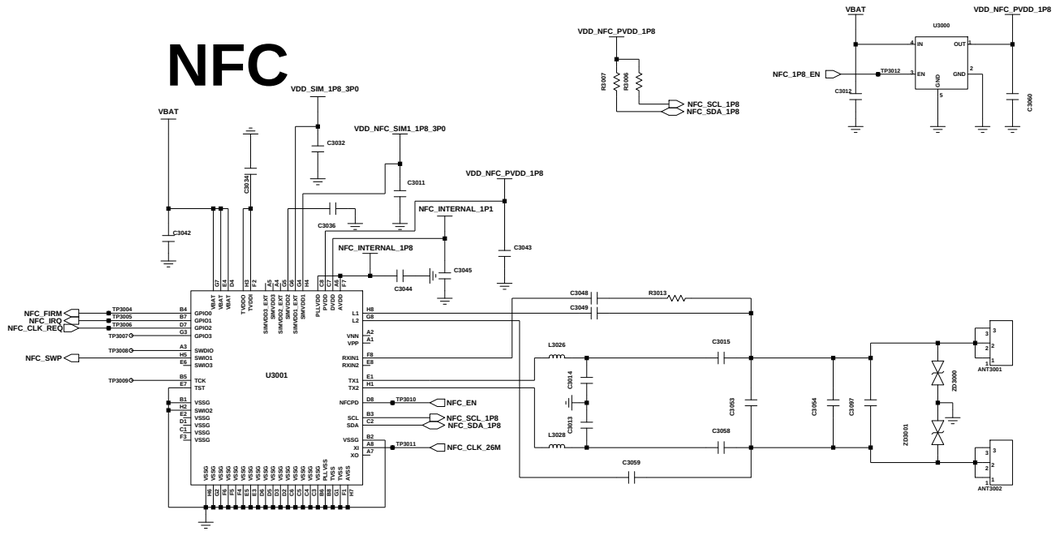

NFC	NFC PART	Power supply of SIM1		NFC GPIO 14	
	U3000	R6001	R6018	R4012	R4013
NFC	CONNECT	short	open	10K ohm	open
nonNFC	NC	open	short	open	10K ohm

GPS

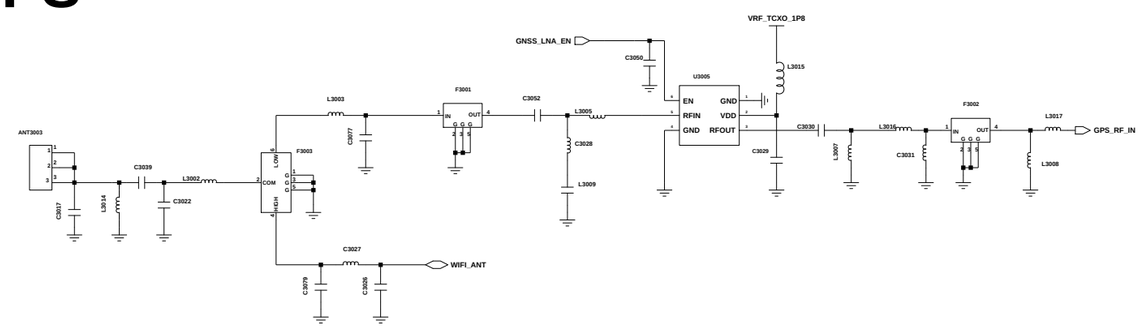

SENSORS

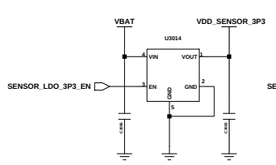

SENSOR LDO

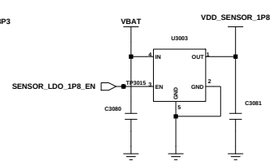

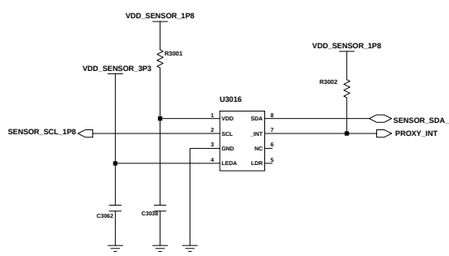

Proxi Sensor

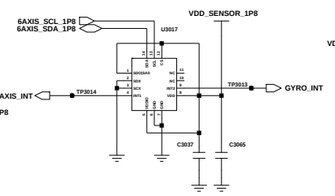

6 AXIS(ACC+GRYO)

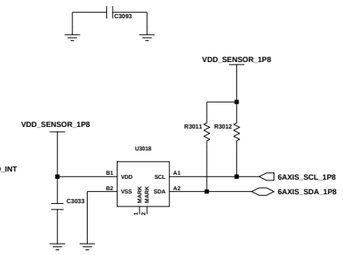

MAGNETIC

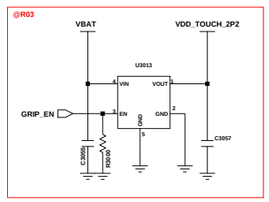

Grip Sensor

Engineer:	SENSOR, WIFI/BT/GPS/NFC
Drawn by:	
R&D CHK:	TITLE: SM-M305M
DOC CTRL CHK:	Size:
MFG ENGR CHK:	
Changed by: user93 / Date Changed: / Time Changed: / QA CHK:	REV: / Drawing Number: / Page: 3/7

SAMSUNG CONFIDENTIAL
THIS DOCUMENT CONTAINS CONFIDENTIAL
AND PROPRIETARY INFORMATION OF
SAMSUNG ELECTRONICS CO'S PROPERTY.
DO NOT DISCLOSE TO OR DUPLICATE FOR OTHERS
EXCEPT AS AUTHORIZED BY SAMSUNG.

EXYNOS7904 (Lassen O+)

POP LP4 4G : 1105-002915
POP LP4 6G : 1105-002939

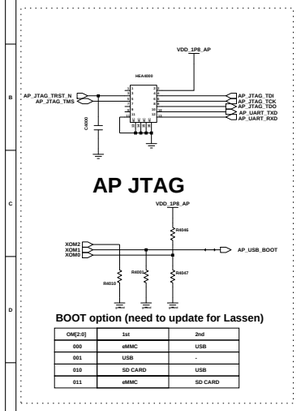

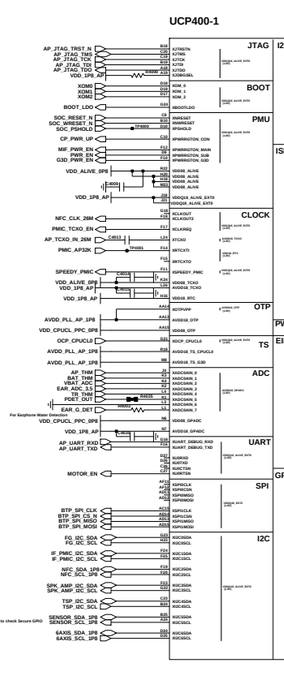

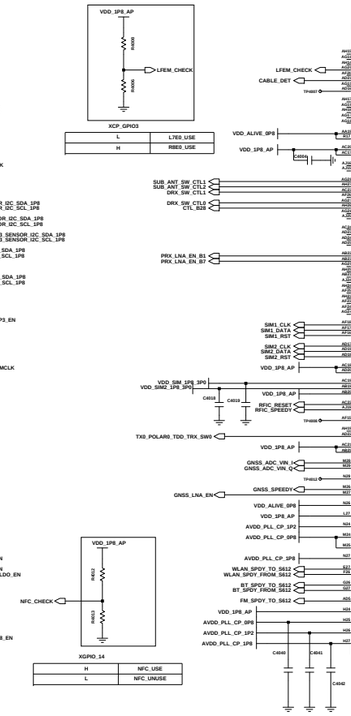

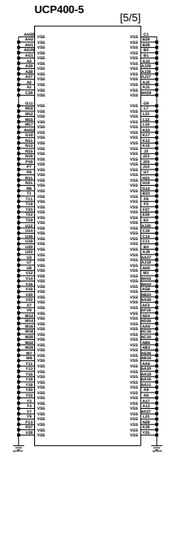

I2C Pull-up Register

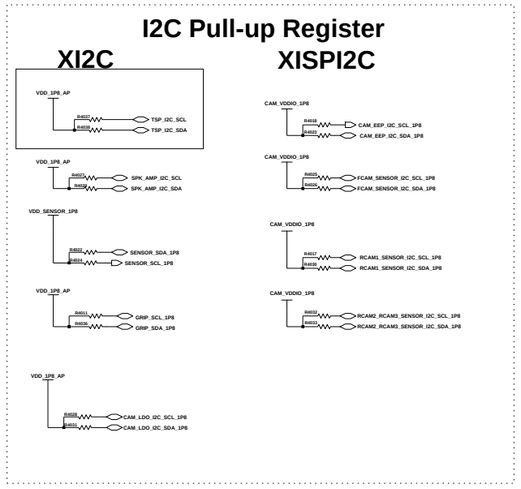

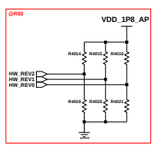

H/W Revision Setting

REV	HW_VER2	HW_VER1	HW_VER0
REV00	0	0	0
REV00A	0	0	1
REV01	0	1	0
REV02	0	1	1
REV03	1	0	0

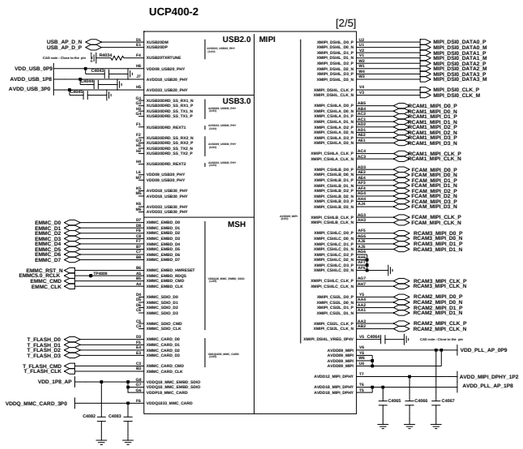

AP Decap

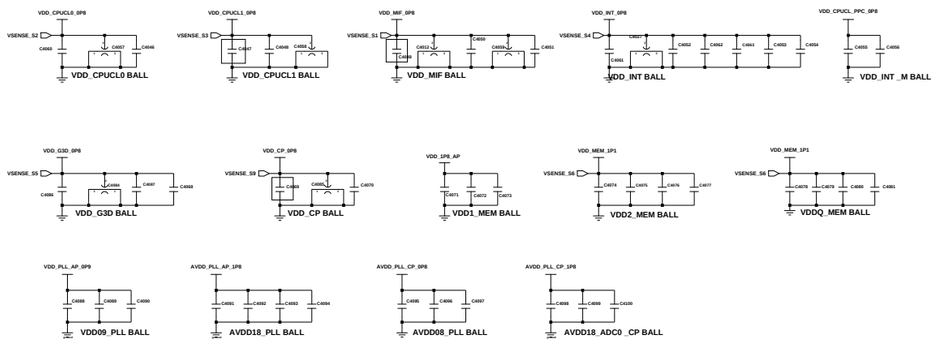

PCB JTAG

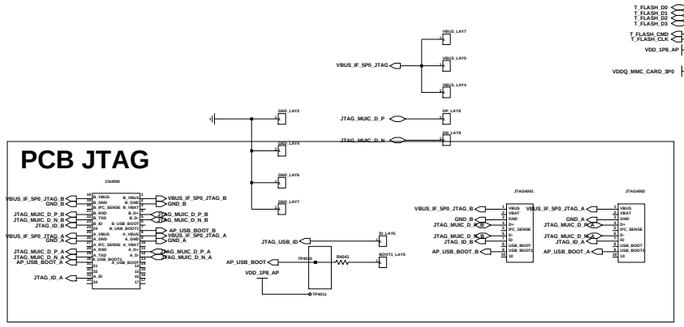

Engineer:	
Drawn by:	AP
R&D CHK:	TITLE:
DOC CTRL CHK:	SM-M305M
MFG ENGR CHK:	
Q/A CHK:	SIZE / Drawing Number: / Page: 87

Changed by: | Date Changed: | Time Changed:

SAMSUNG CONFIDENTIAL
THIS DOCUMENT CONTAINS CONFIDENTIAL
AND PROPRIETARY INFORMATION OF
SAMSUNG ELECTRONICS CO'S PROPERTY.
DO NOT DISCLOSE TO OR DUPLICATE FOR OTHERS
EXCEPT AS AUTHORIZED BY SAMSUNG.

MAIN_PMIC

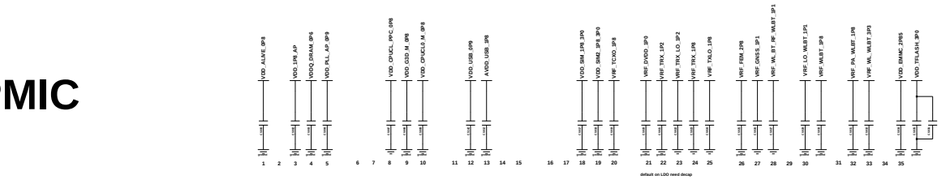

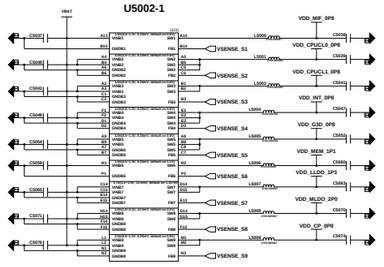

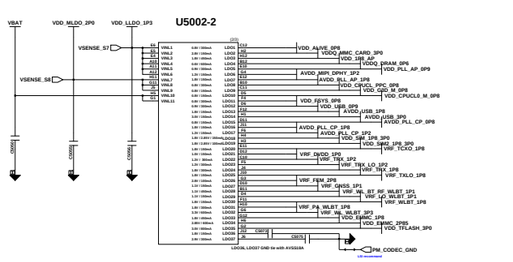

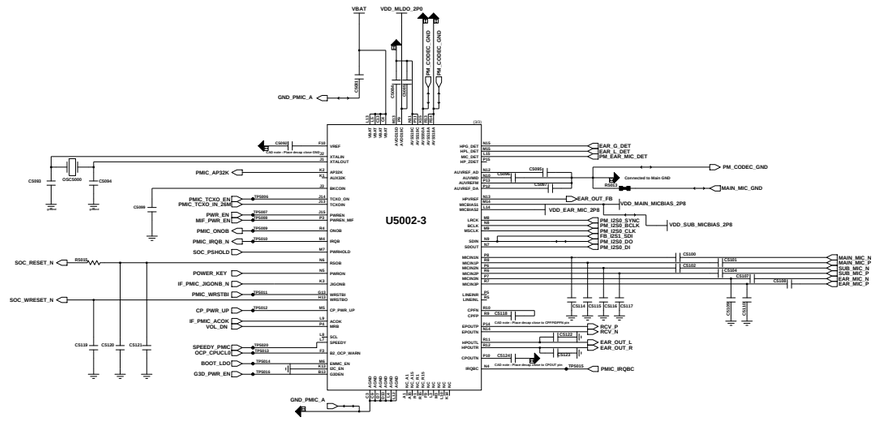

IF_PMIC

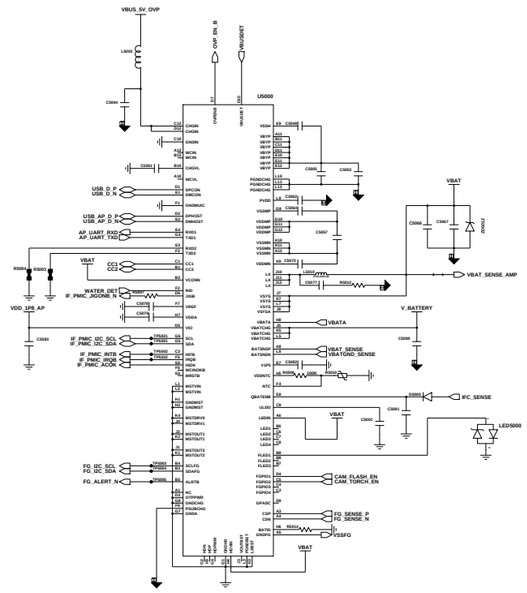

IF PMIC(S2MU106)

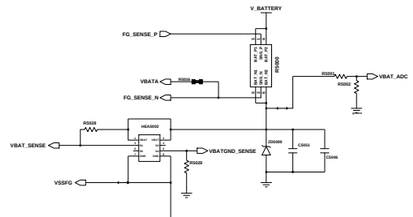

BATTERY CON

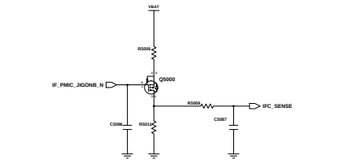

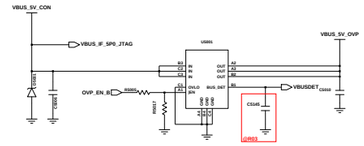

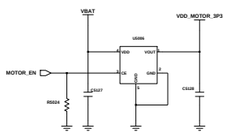

MOTOR

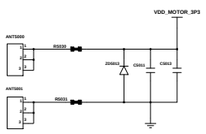

MOTOR

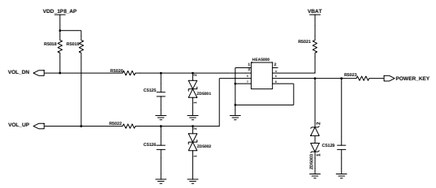

VOLUME KEY POWER KEY

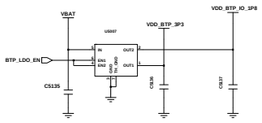

FPS PWR

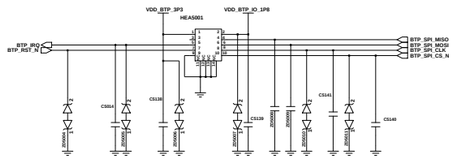

Finger Print Sensor

eMMC

64GB : 1107-002633
128GB : 1107-002639

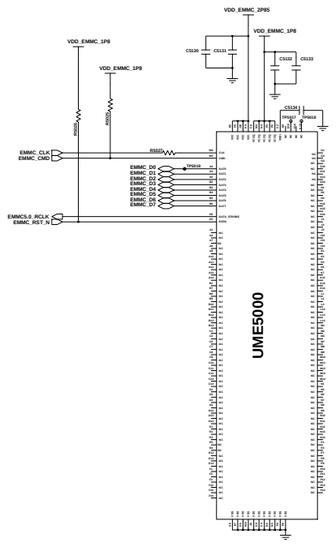

Engineer:	PMIC/IF PMIC/eMMC
Drawn by:	
R&D CHK:	TITLE: SM-M305M
DOC CTRL CHK:	
MFG ENGR CHK:	
Q4 CHK:	Drawing Number:

Changed by: | Date Changed: | Time Changed: | REV | Page 1p1

SAMSUNG CONFIDENTIAL
THIS DOCUMENT CONTAINS CONFIDENTIAL PROPRIETARY INFORMATION THAT IS SAMSUNG ELECTRONICS CO'S PROPERTY. DO NOT DISCLOSE TO OR DUPLICATE FOR OTHERS EXCEPT AS AUTHORIZED BY SAMSUNG.

AUDIO

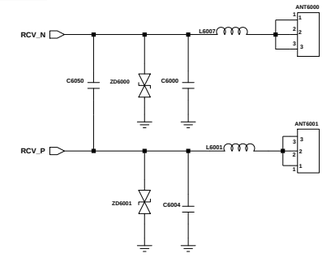

RCV CONTACT

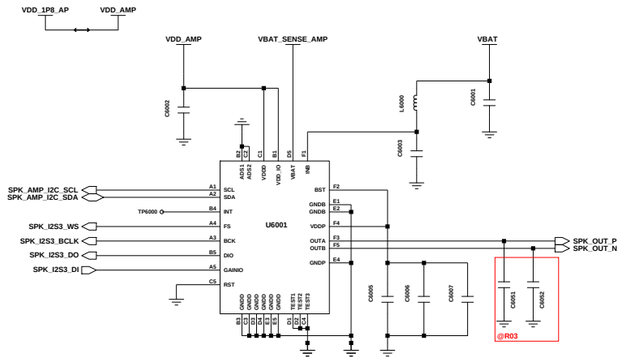

Audio AMP

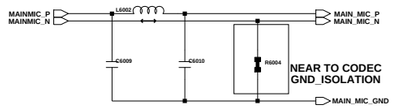

MAIN MIC

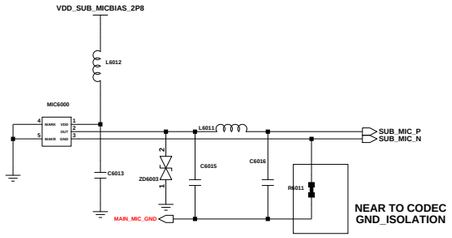

Sub MIC

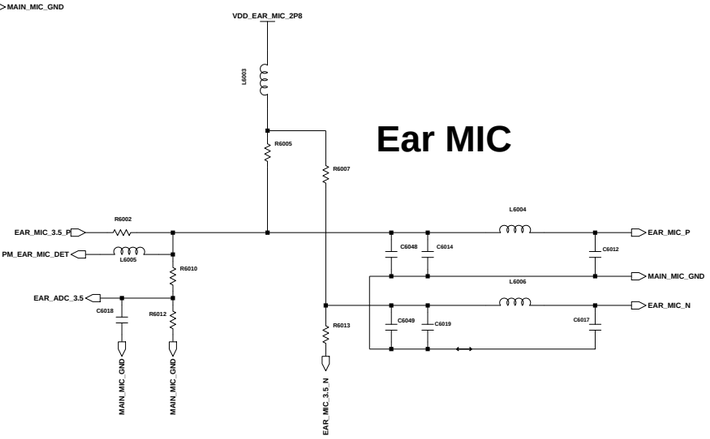

Ear MIC

SIM & SD CARD (3IN3)

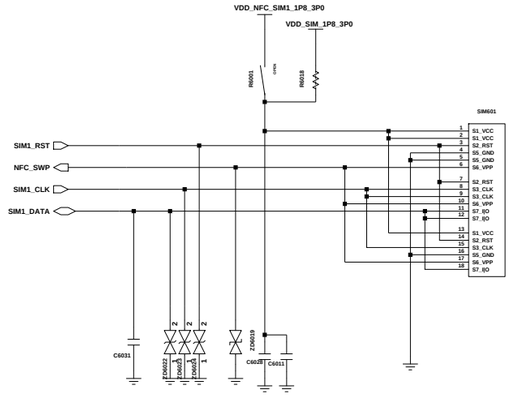

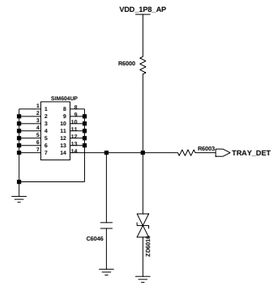

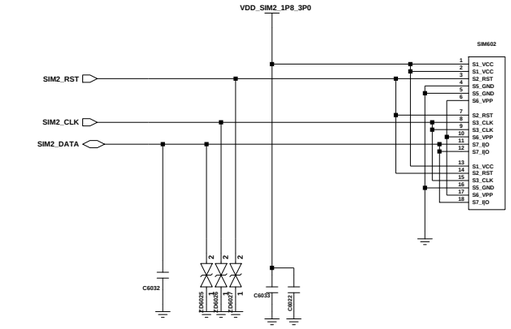

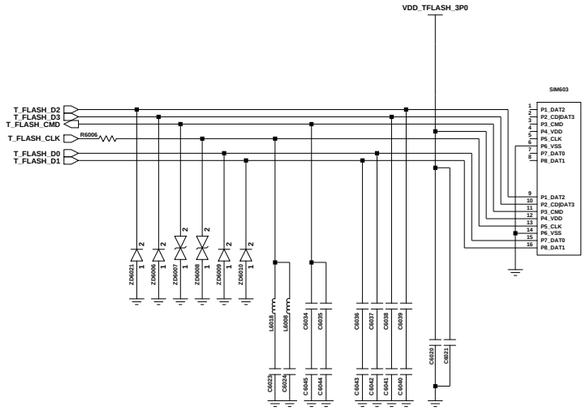

SHIELD CAN

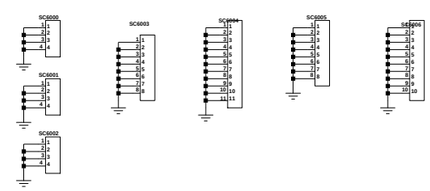

2D BARCODE

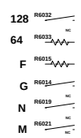

	FN (EUR, CIS)	F (MEA)	G (SEA, SWA)	GN (BR)	M	
R6015			Solder	Solder	Solder	
R6014	Solder	Solder				
R6019	Solder					
R6021				Solder	Solder	

MAIN FPCB

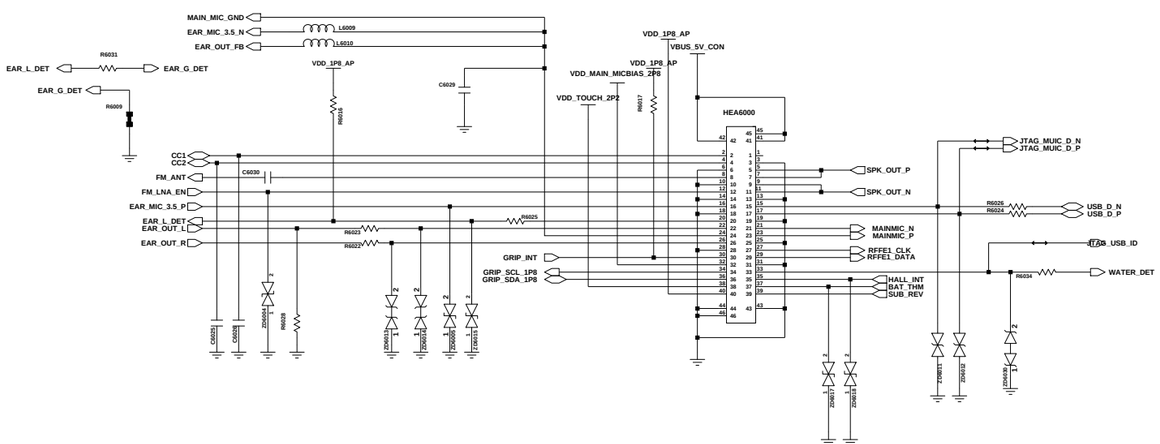

BOTH HOLE

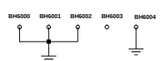

Engineer:	
Drawn by:	AUDIO, SIM/SD, SHIELD CAN
R&D CHK:	TITLE: SM-M305M
DOC CTRL CHK:	Size:
MFG ENGR CHK:	

Changed by:	Date Changed:	Time Changed:	QA CHK:	REV:	Drawing Number:	Page:6/7

SAMSUNG CONFIDENTIAL
THIS DOCUMENT CONTAINS CONFIDENTIAL
PROPRIETARY INFORMATION THAT IS
SAMSUNG ELECTRONICS CO'S PROPERTY.
DO NOT DISCLOSE TO OR DUPLICATE FOR OTHERS
EXCEPT AS AUTHORIZED BY SAMSUNG.

CAMERA_PART

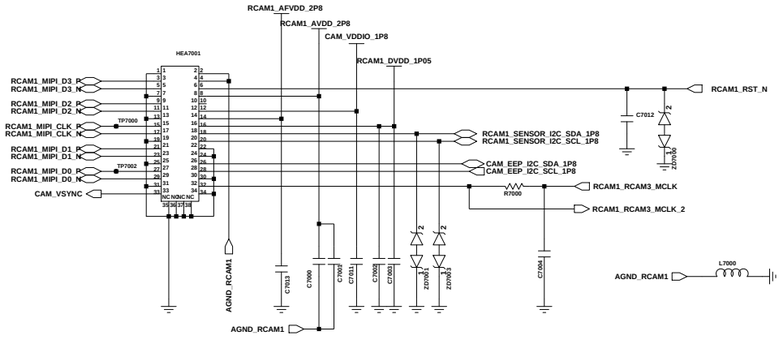

RCAM1_13M CAMERA(34PIN)

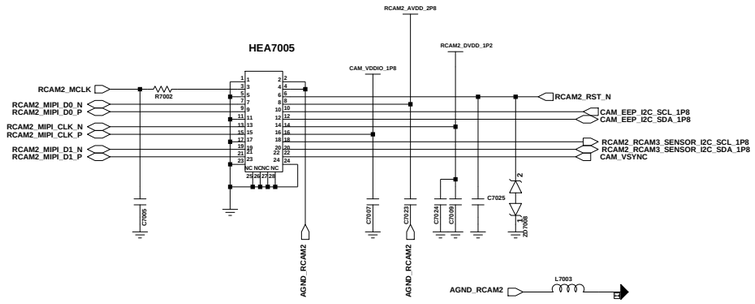

RCAM2_SUPER WIDE_5M CAMERA(24PIN)

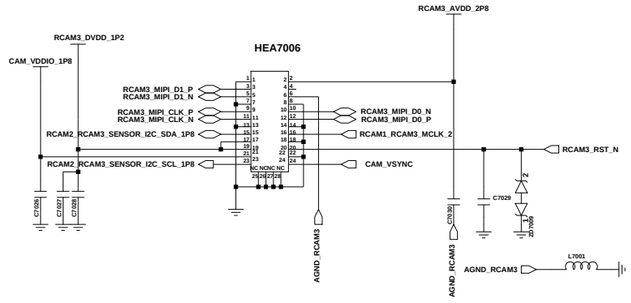

RCAM3_BOKEH_5M CAMERA(24PIN)

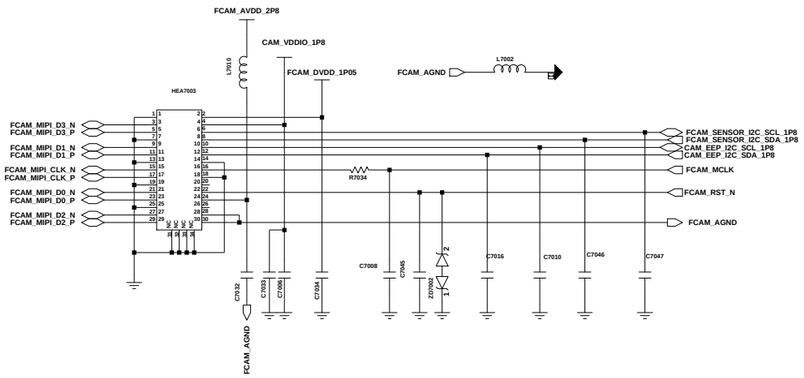

FRONT_16M CAMERA (30PIN)

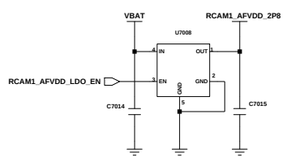

RCAM1 LDO

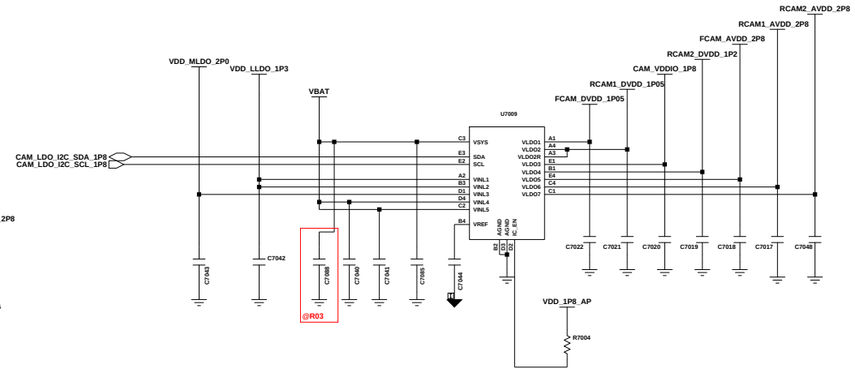

CAM PMIC

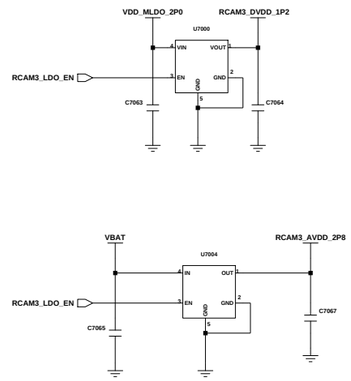

RCAM3 LDO

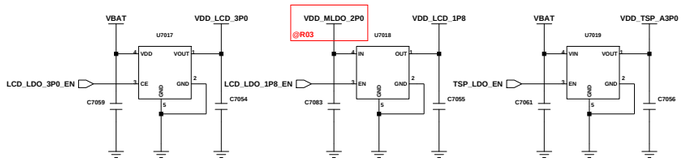

OCTA LDO

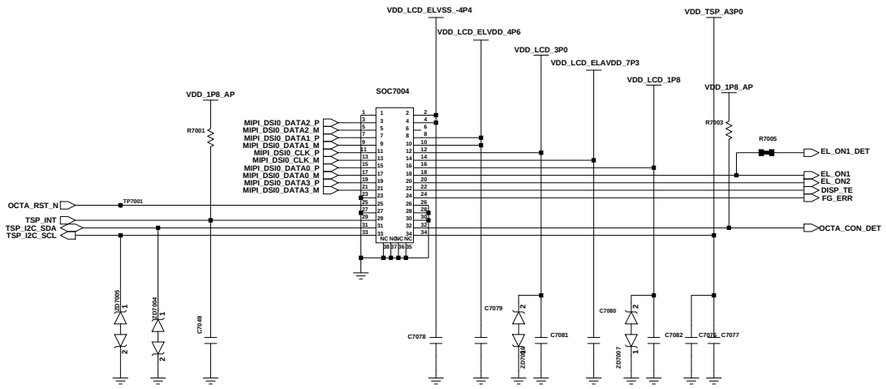

6.38" FHD+ DISPLAY

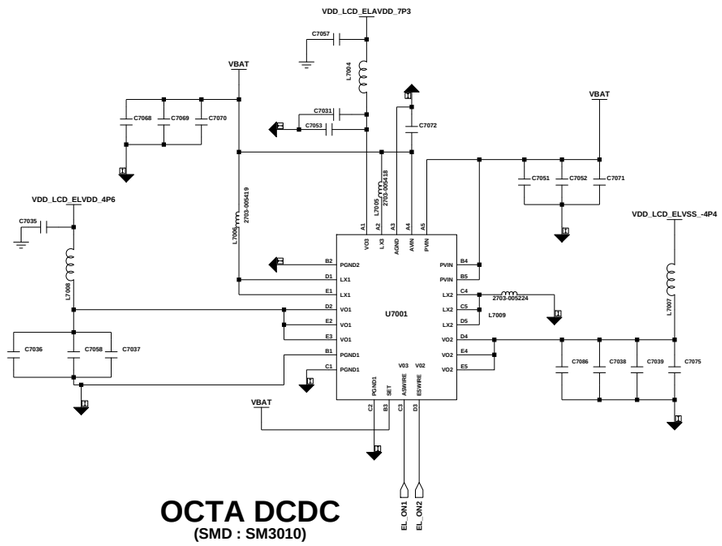

OCTA DCDC
(SMD : SM3010)

Engineer:			
Drawn by:			CAMERA, DISPLAY
R&D CHK:			TITLE: SM-M305M
DOC CTRL CHK:			
MFG ENGR CHK:			
Changed by:	Date Changed:	Time Changed:	QA CHK:

REV | Drawing Number: | Size: | Page: 2/7

SAMSUNG CONFIDENTIAL
THIS DOCUMENT CONTAINS CONFIDENTIAL
PROPRIETARY INFORMATION THAT IS
SAMSUNG ELECTRONICS CO'S PROPERTY.
DO NOT DISCLOSE TO OR DUPLICATE FOR OTHERS
EXCEPT AS AUTHORIZED BY SAMSUNG.

SM-M305M_REV03_LA_64

2019.01.29

sheet01 : GSM / WCDMA / LTE RF
sheet02 : TRANCEIVER, DRX
sheet03 : SENSORS, DMB, CONNECTIVITY
sheet04 : LASSEN O+(EXYNOS7904)
sheet05 : PMIC(Main,IF), KEY, MOTOR, eMMC, IF CON
sheet06 : AUDIO, SD/SIM, SHIELD CAN
sheet07 : CAMERA, DISPLAY

Engineer:			
Drawn by:			
R&D CHK:	TITLE: SM-M305M		Size:
DOC CTRL CHK:			
MFG ENGR CHK:			
Changed by: user93	Date Changed:	Time Changed:	QA CHK:
REV	Drawing Number:		Page: 0

SAMSUNG CONFIDENTIAL
THIS DOCUMENT CONTAINS CONFIDENTIAL
PROPRIETARY INFORMATION THAT IS
SAMSUNG ELECTRONICS CO'S PROPERTY.
DO NOT DISCLOSE TO OR DUPLICATE FOR OTHERS
EXCEPT AS AUTHORIZED BY SAMSUNG.

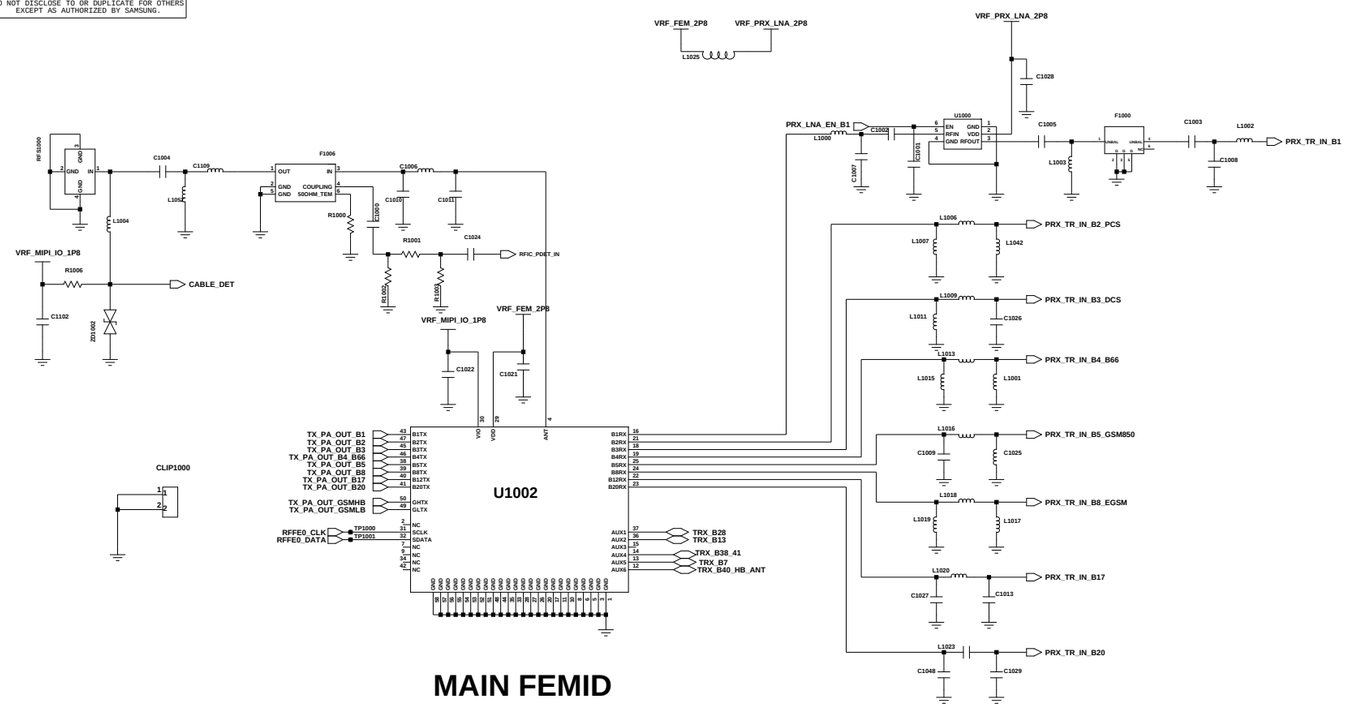

MAIN FEMID

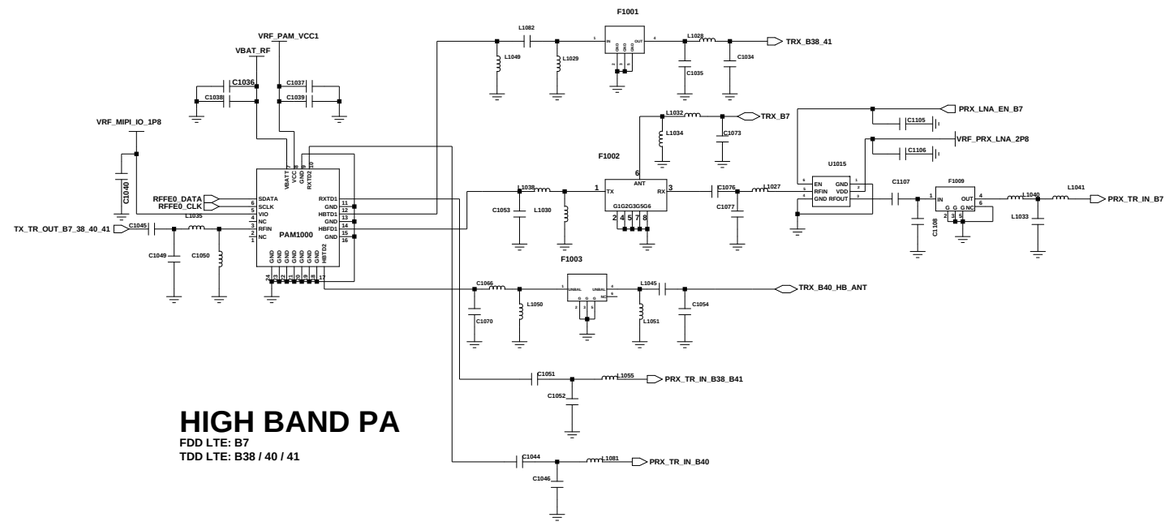

HIGH BAND PA

FDD LTE: B7
TDD LTE: B38 / 40 / 41

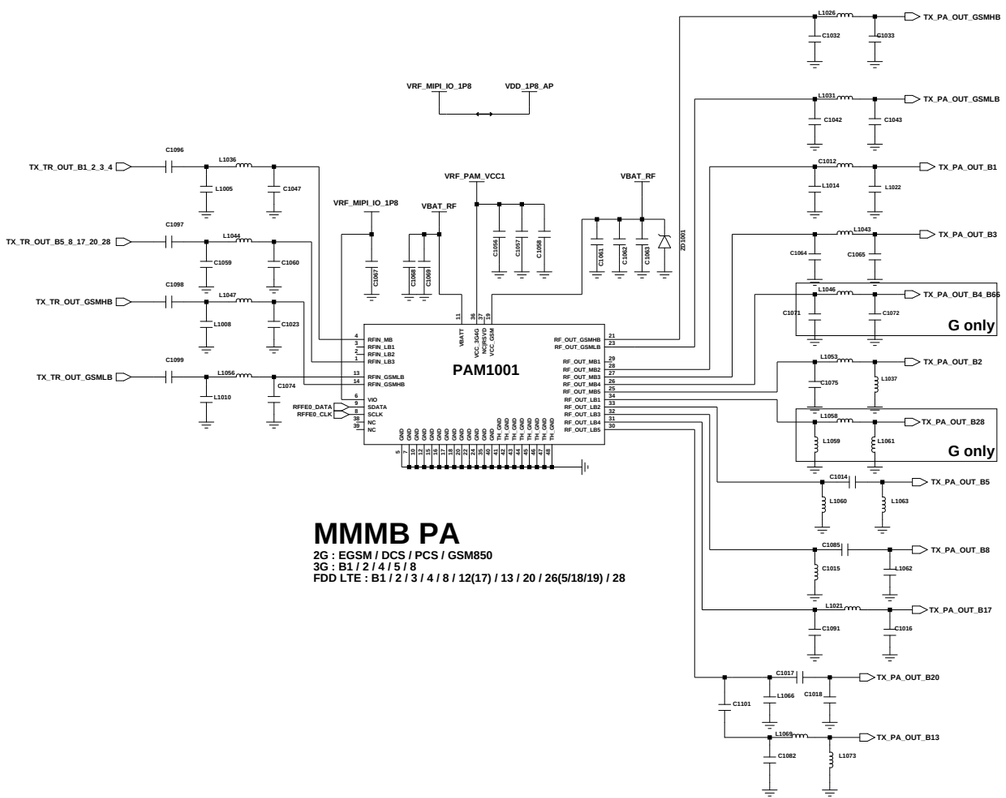

MMMB PA

2G : EGSM / DCS / PCS / GSM850
3G : B1 / 2 / 4 / 5 / 8
FDD LTE : B1 / 2 / 3 / 4 / 8 / 12(17) / 13 / 20 / 26(5/18/19) / 28

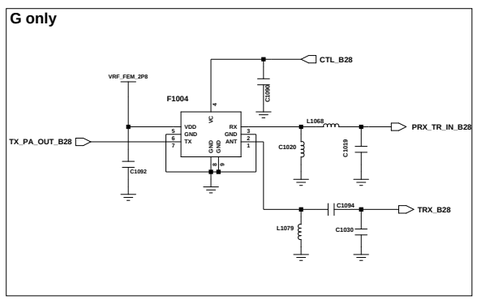

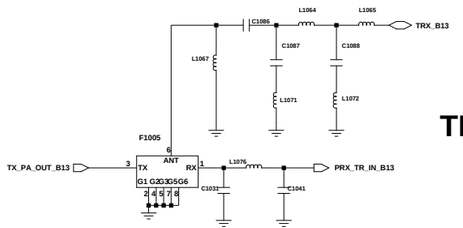

THERMISTER

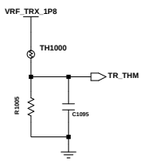

Engineer: user	SAMSUNG ELECTRONICS	
Drawn by: user		
R&D CHK:	TITLE: M30_RF	Size: 16 1 12 A
DOC CTRL CHK:		
MFG ENGR CHK:		

Changed by:	Date Changed:	Time Changed:	QA CHK:	REV:	Drawing Number:	Page:
user	Monday, April 23, 2018	8:49:04 pm				1

SAMSUNG CONFIDENTIAL
THIS DOCUMENT CONTAINS CONFIDENTIAL
PROPRIETARY INFORMATION THAT IS
SAMSUNG ELECTRONICS CO'S PROPERTY.
DO NOT DISCLOSE TO OR DUPLICATE FOR OTHERS
EXCEPT AS AUTHORIZED BY SAMSUNG.

DRX

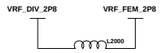

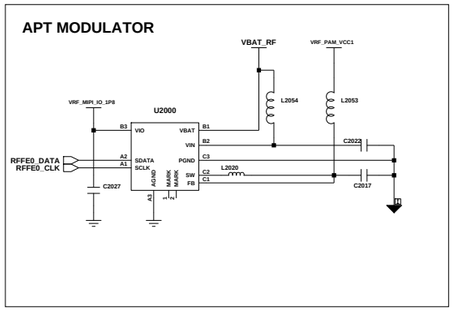

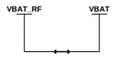

GND

APT MODULATOR

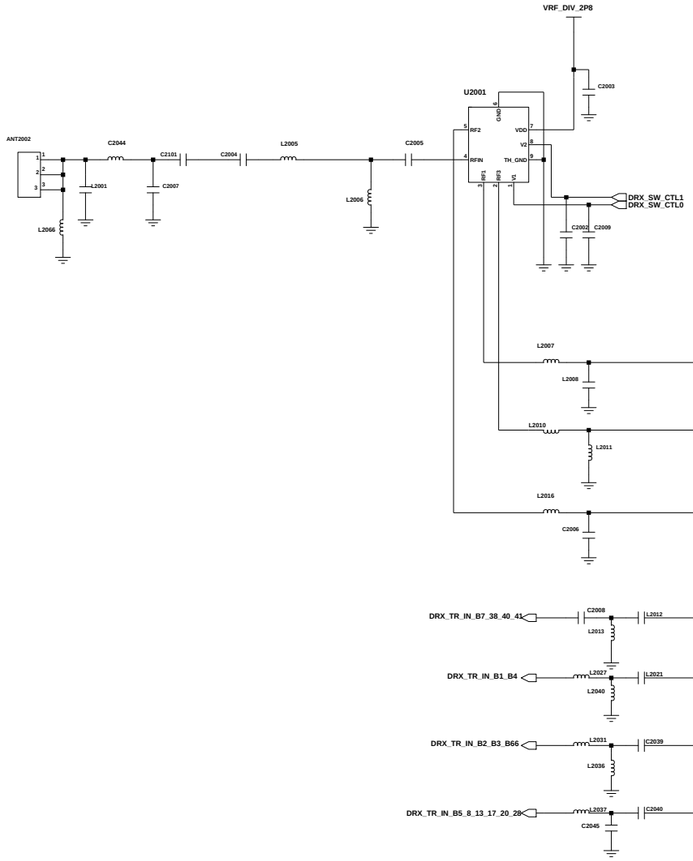

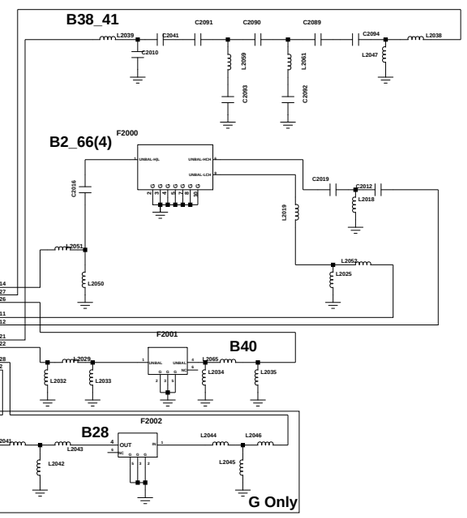

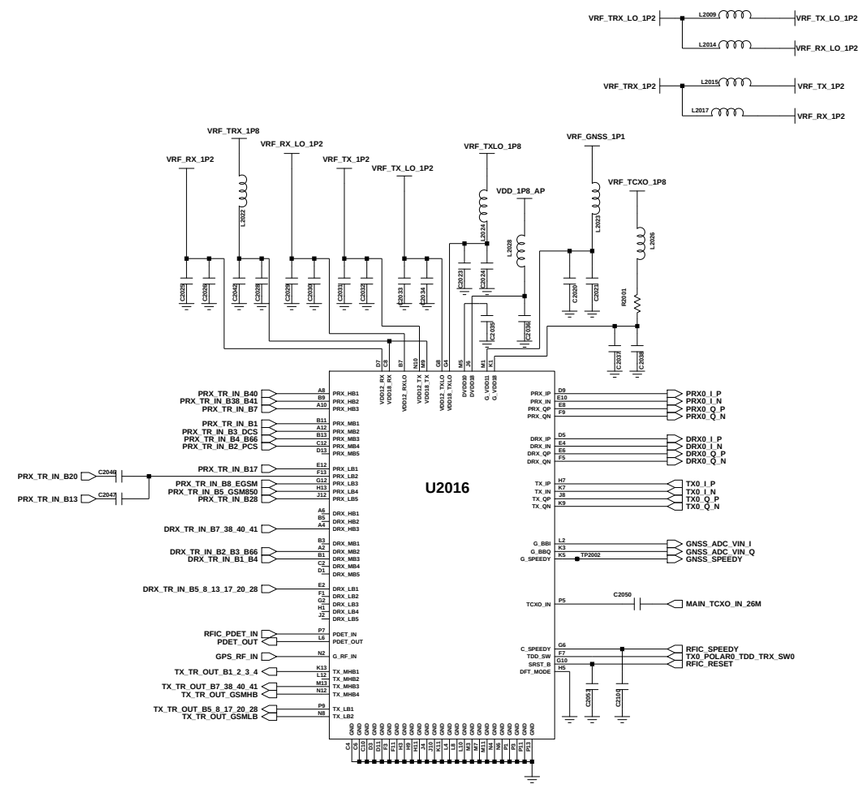

TRANCEIVER

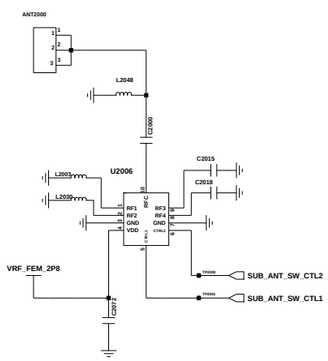

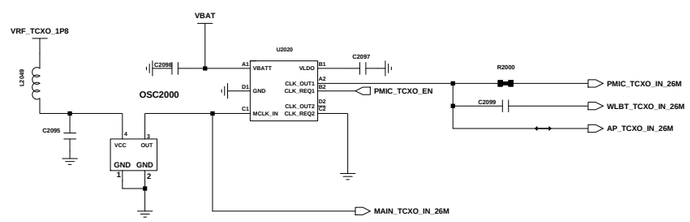

Engineer	DRX, TRANCEIVER		
Drawn by:			
R&D CHK:	TITLE:	Size:	
DOC CTRL CHK:	SM-M305M		
MFG ENGR CHK:			
Changed by: / Date Changed: / Time Changed: / QA CHK:	Drawing Number	2/7	

SAMSUNG CONFIDENTIAL
THIS DOCUMENT CONTAINS CONFIDENTIAL
PROPRIETARY INFORMATION THAT IS
SAMSUNG ELECTRONICS CO'S PROPERTY.
DO NOT DISCLOSE TO OR DUPLICATE FOR OTHERS
EXCEPT AS AUTHORIZED BY SAMSUNG.

BT/WIFI

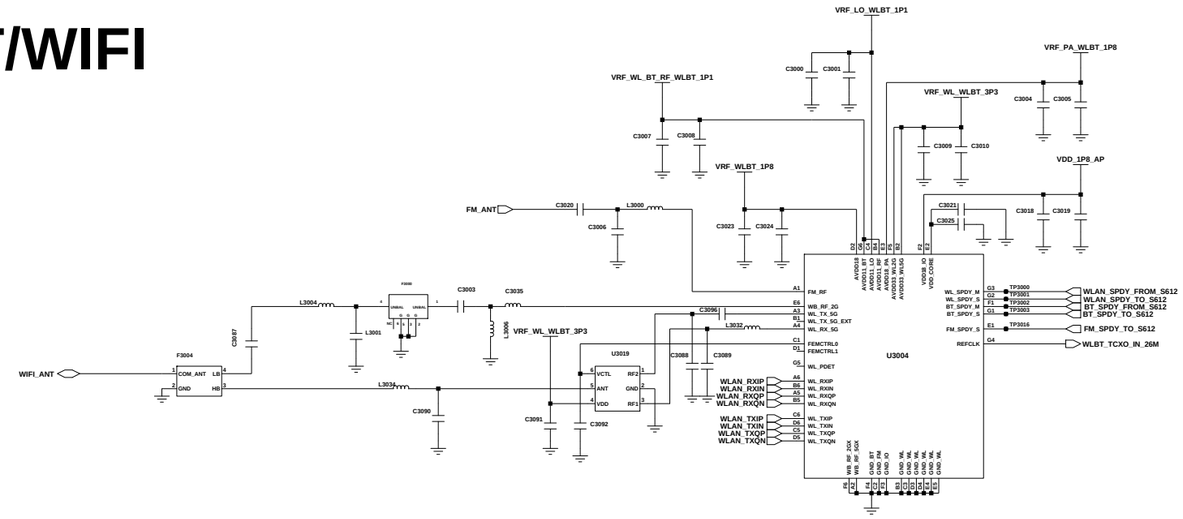

NFC

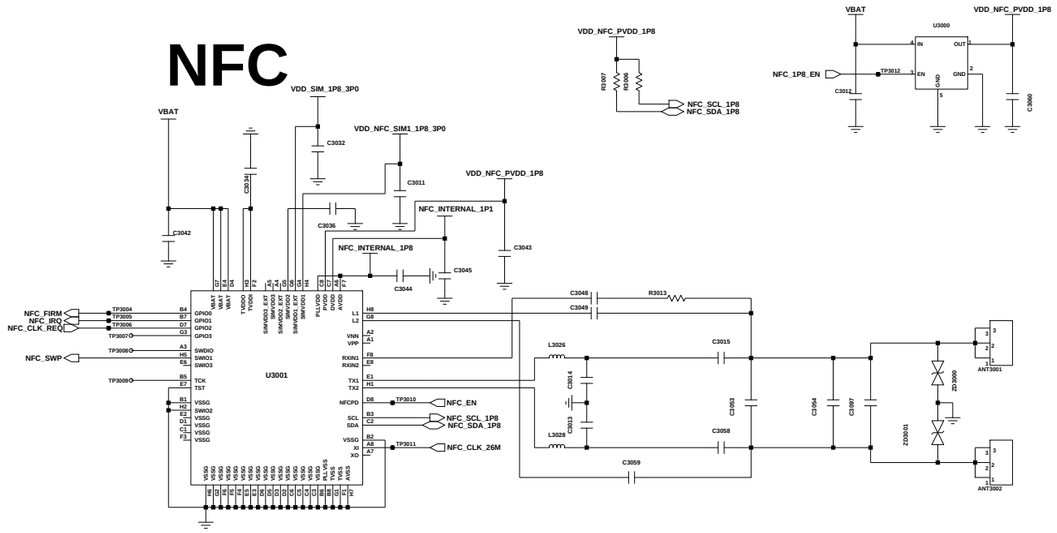

NFC	NFC PART	Power supply of SIM1		NFC GPIO 14	
	U3000	R6001	R6018	R4012	R4013
NFC	CONNECT	short	open	10K ohm	open
nonNFC	NC	open	short	open	10K ohm

GPS

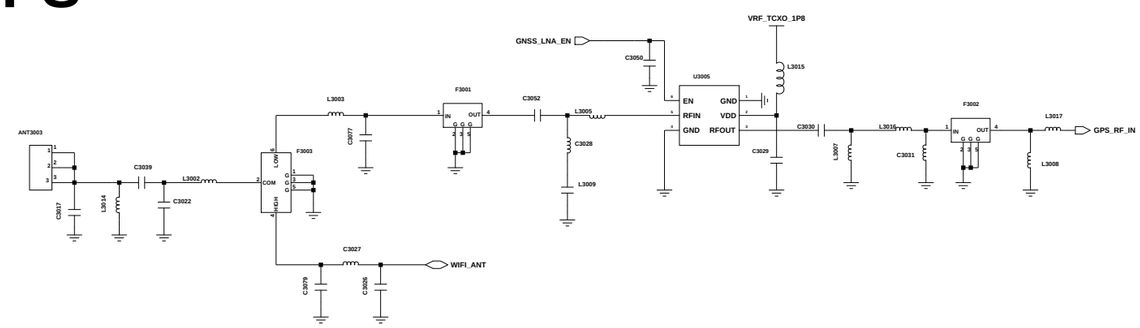

SENSORS

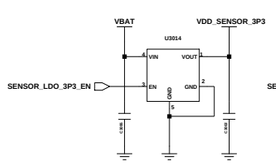

SENSOR LDO

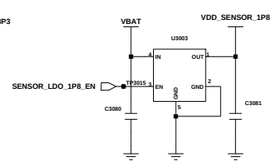

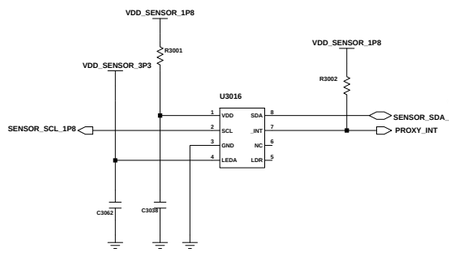

Proxi Sensor

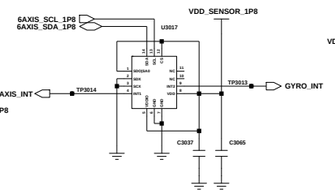

6 AXIS(ACC+GRYO)

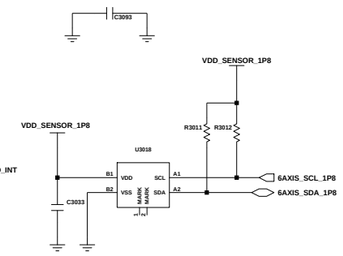

MAGNETIC

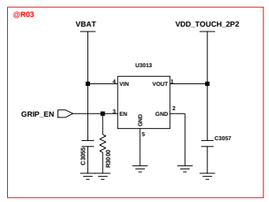

Grip Sensor

Engineer:	SENSOR, WIFI/BT/GPS/NFC
Drawn by:	
R&D CHK:	TITLE: SM-M305M
DOC CTRL CHK:	Size:
MFG ENGR CHK:	
Changed by: user93 / Date Changed: / Time Changed: / QA CHK:	REV: / Drawing Number: / Page: 3/7

SAMSUNG CONFIDENTIAL
THIS DOCUMENT CONTAINS CONFIDENTIAL
AND PROPRIETARY INFORMATION OF
SAMSUNG ELECTRONICS CO'S PROPERTY.
DO NOT DISCLOSE TO OR DUPLICATE FOR OTHERS
EXCEPT AS AUTHORIZED BY SAMSUNG.

EXYNOS7904 (Lassen O+)

POP LP4 4G : 1105-002915
POP LP4 6G : 1105-002939

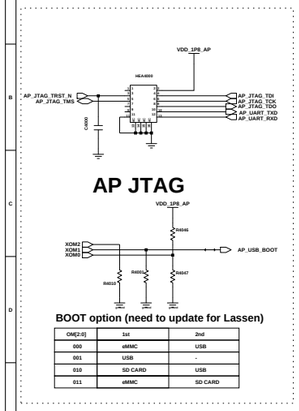

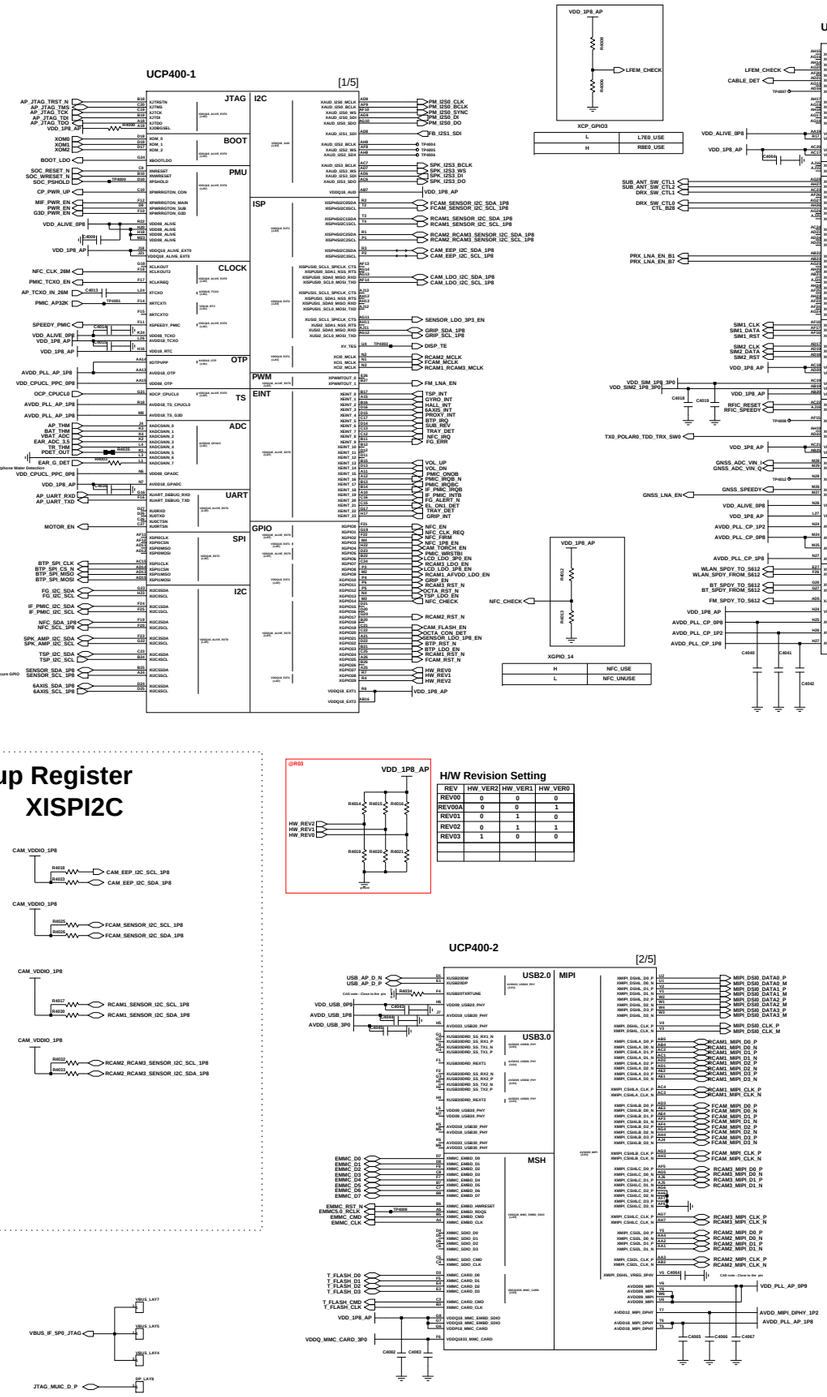

I2C Pull-up Register

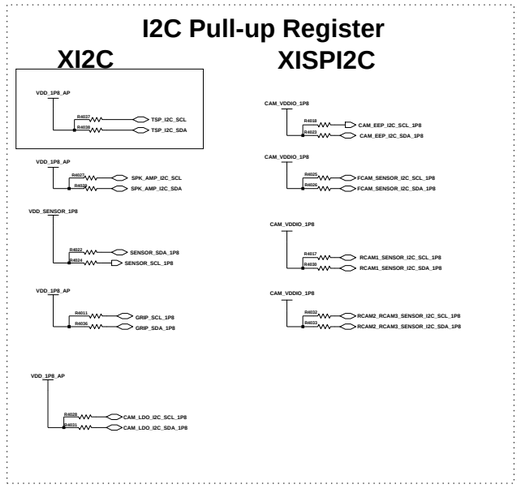

H/W Revision Setting

REV	HW_VER2	HW_VER1	HW_VER0
REV00	0	0	0
REV00A	0	0	1
REV01	0	1	0
REV02	0	1	1
REV03	1	0	0

AP Decap

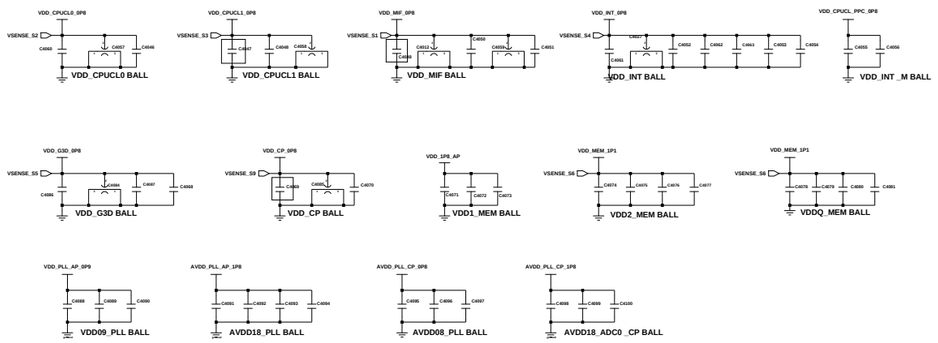

PCB JTAG

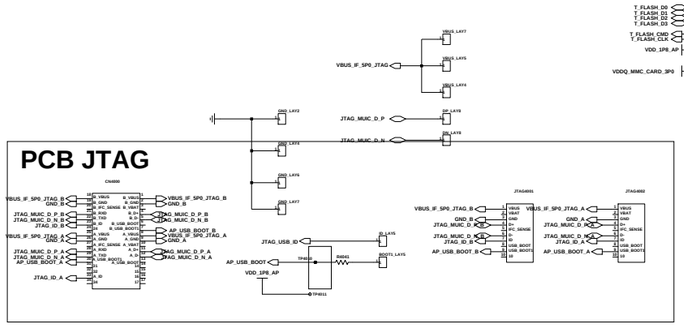

Engineer:	
Drawn by:	AP
R&D CHK:	TITLE:
DOC CTRL CHK:	SM-M305M
MFG ENGR CHK:	
Q/A CHK:	SIZE / Drawing Number: / Page: 87

Changed by: | Date Changed: | Time Changed:

SAMSUNG CONFIDENTIAL
THIS DOCUMENT CONTAINS CONFIDENTIAL
AND PROPRIETARY INFORMATION OF
SAMSUNG ELECTRONICS CO'S PROPERTY.
DO NOT DISCLOSE TO OR DUPLICATE FOR OTHERS
EXCEPT AS AUTHORIZED BY SAMSUNG.

MAIN_PMIC

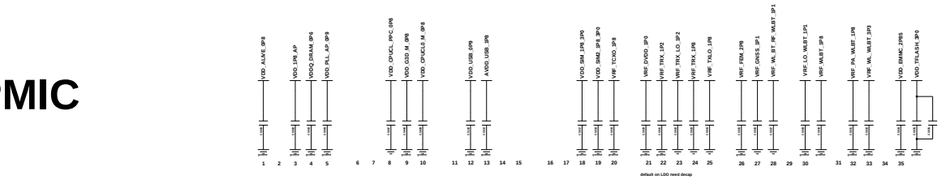

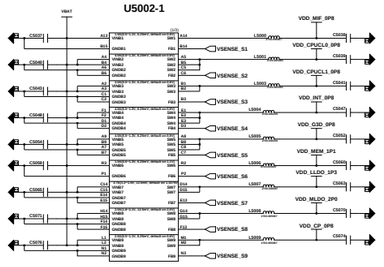

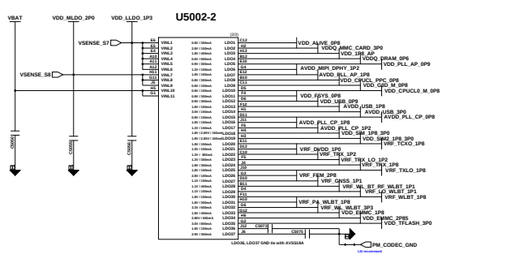

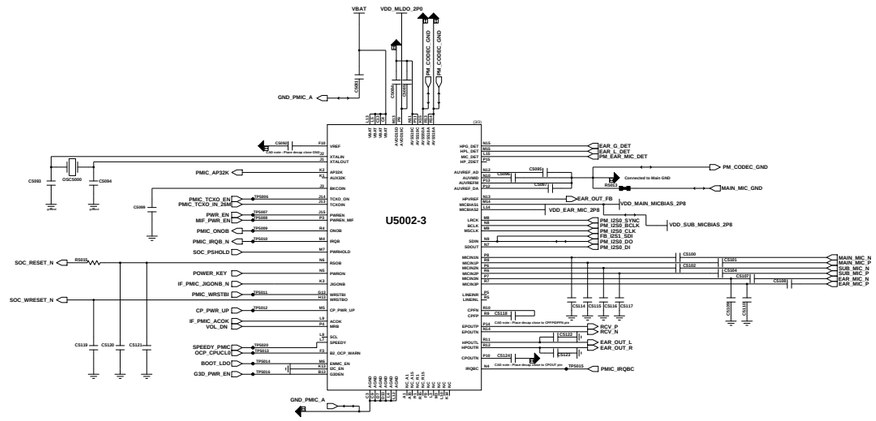

IF_PMIC

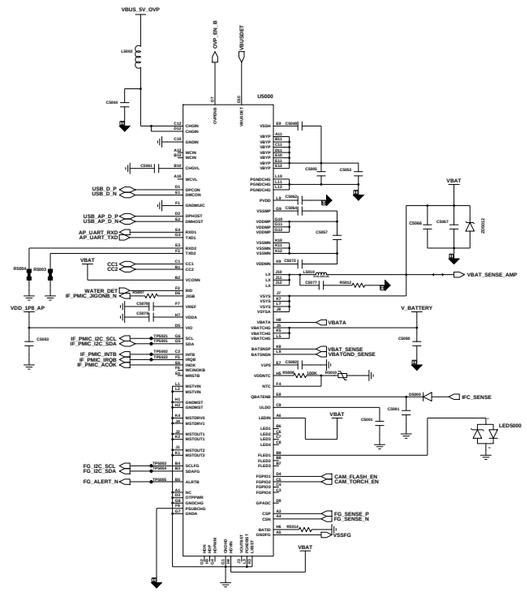

IF PMIC(S2MU106)

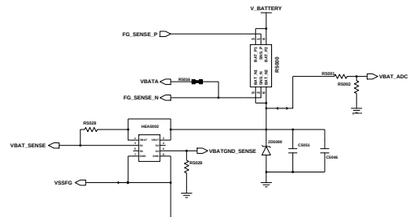

BATTERY CON

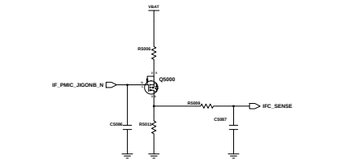

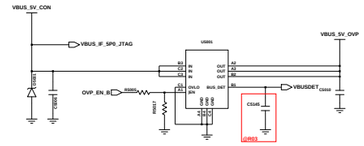

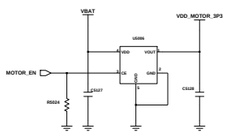

MOTOR

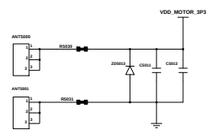

MOTOR

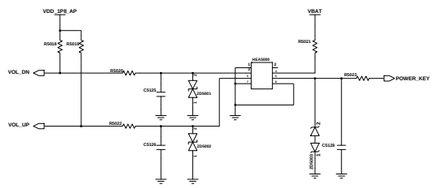

VOLUME KEY POWER KEY

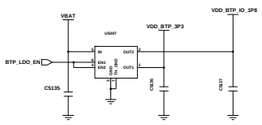

FPS PWR

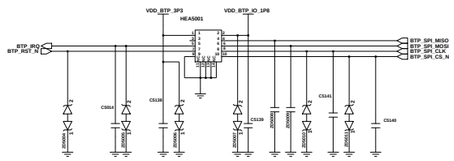

Finger Print Sensor

eMMC

64GB : 1107-002633
128GB : 1107-002639

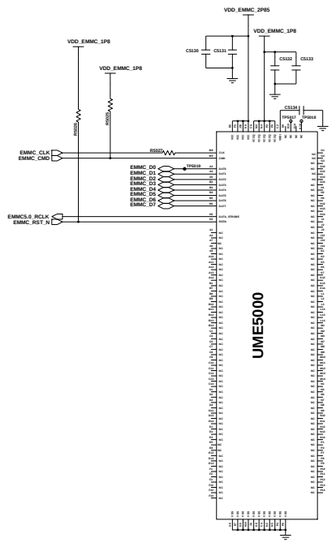

Engineer:	PMIC/IF PMIC/eMMC
Drawn by:	
R&D CHK:	TITLE: SM-M305M
DOC CTRL CHK:	
MFG ENGR CHK:	
Changed by: / Date Changed: / Time Changed:	Q4 CHK: / REV: / Drawing Number: / Size / Page 1p1

SAMSUNG CONFIDENTIAL
THIS DOCUMENT CONTAINS CONFIDENTIAL PROPRIETARY INFORMATION THAT IS SAMSUNG ELECTRONICS CO'S PROPERTY. DO NOT DISCLOSE TO OR DUPLICATE FOR OTHERS EXCEPT AS AUTHORIZED BY SAMSUNG.

AUDIO

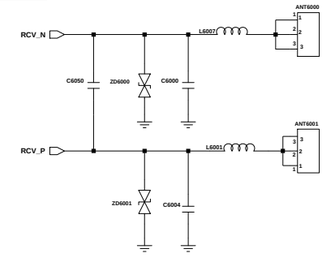

RCV CONTACT

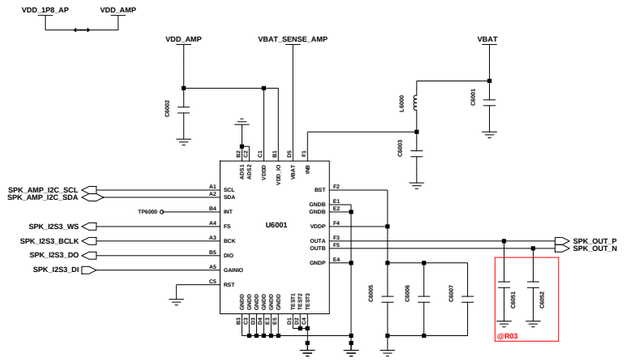

Audio AMP

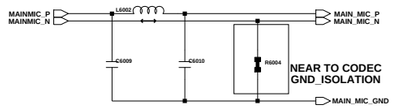

MAIN MIC

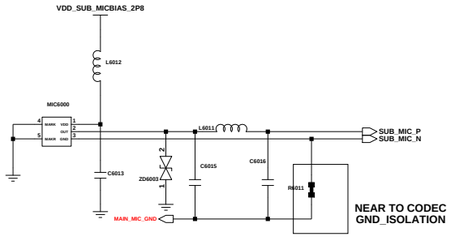

Sub MIC

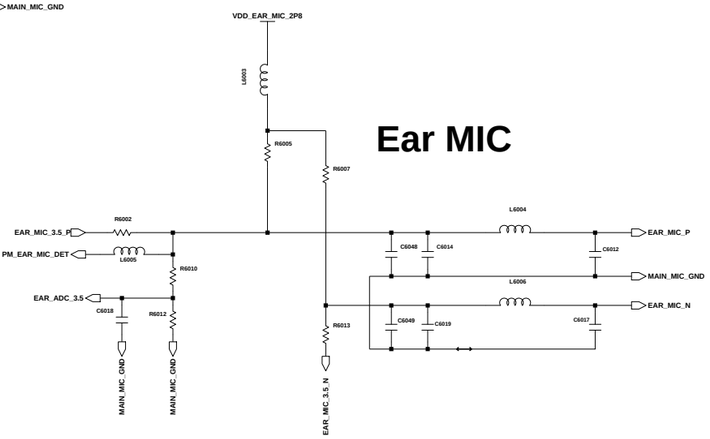

Ear MIC

SIM & SD CARD (3IN3)

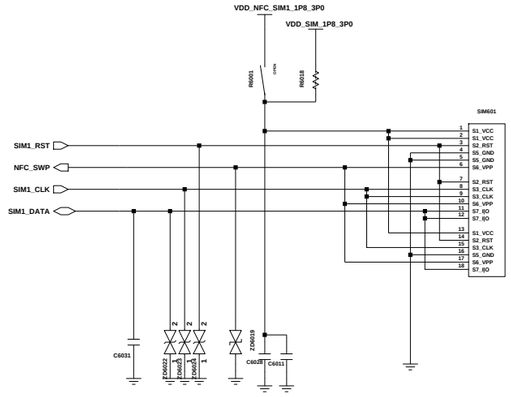

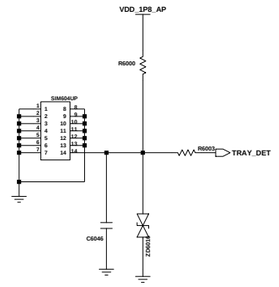

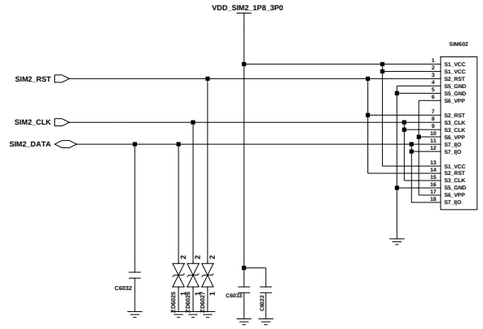

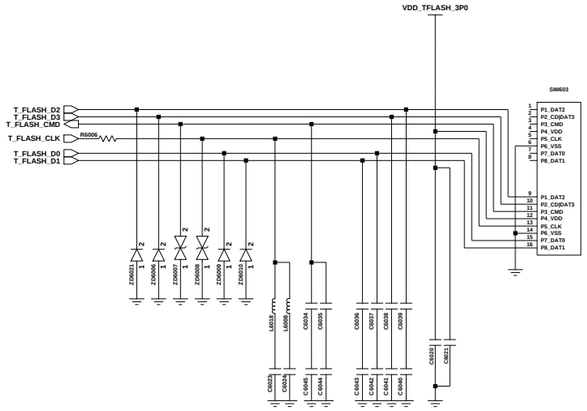

SHIELD CAN

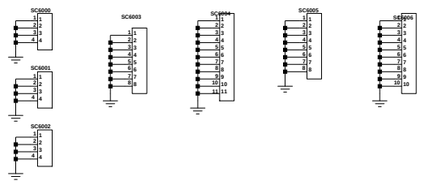

2D BARCODE

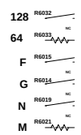

	FN (EUR, CIS)	F (MEA)	G (SEA, SWA)	GN (BR)	M	
R6015			Solder	Solder	Solder	
R6014	Solder	Solder				
R6019	Solder					
R6021				Solder	Solder	

MAIN FPCB

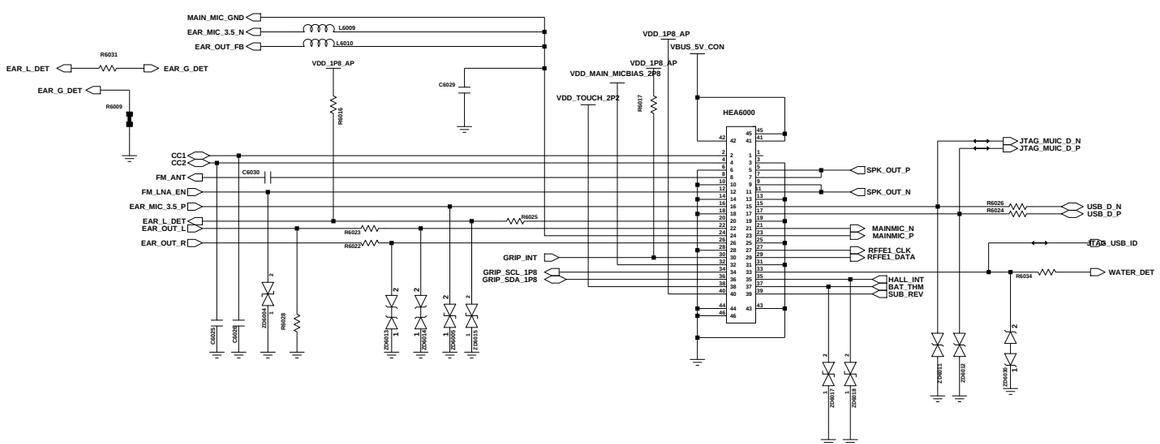

BOTH HOLE

Engineer:	
Drawn by:	AUDIO, SIM/SD, SHIELD CAN
R&D CHK:	TITLE: SM-M305M
DOC CTRL CHK:	Size:
MFG ENGR CHK:	
Changed by: / Date Changed: / Time Changed: / QA CHK:	REV: / Drawing Number: / Page:6/7

SAMSUNG CONFIDENTIAL
THIS DOCUMENT CONTAINS CONFIDENTIAL
PROPRIETARY INFORMATION THAT IS
SAMSUNG ELECTRONICS CO'S PROPERTY.
DO NOT DISCLOSE TO OR DUPLICATE FOR OTHERS
EXCEPT AS AUTHORIZED BY SAMSUNG.

CAMERA_PART

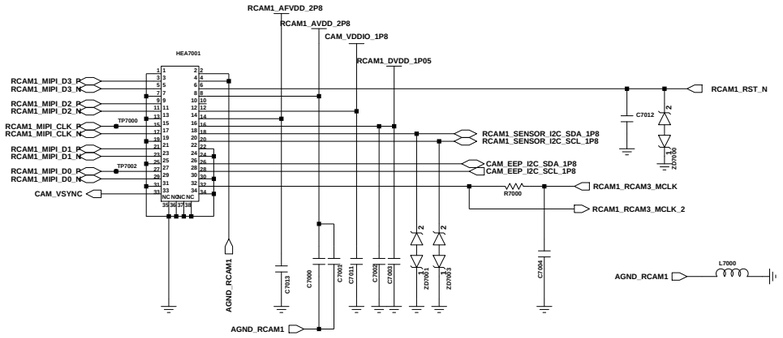

RCAM1_13M CAMERA(34PIN)

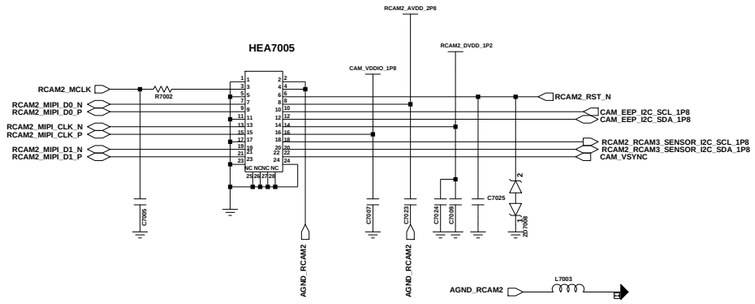

RCAM2_SUPER WIDE_5M CAMERA(24PIN)

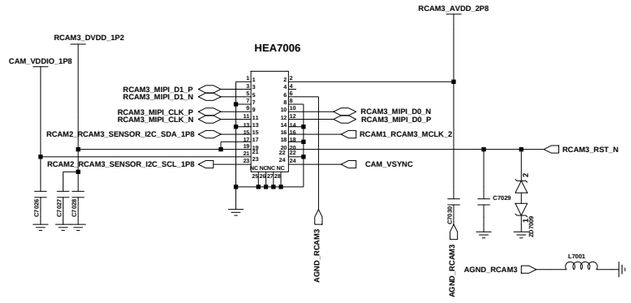

RCAM3_BOKEH_5M CAMERA(24PIN)

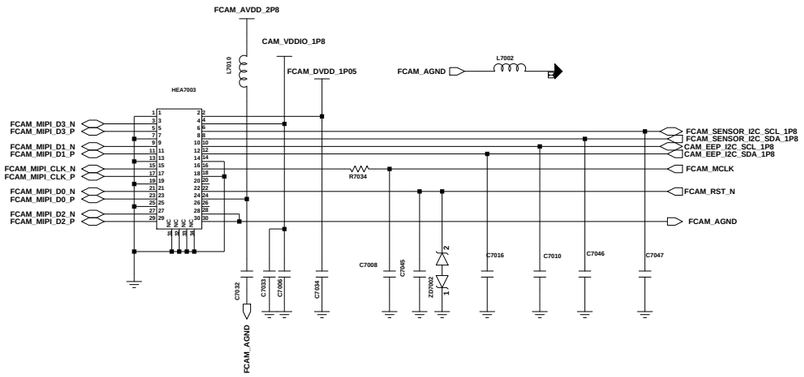

FRONT_16M CAMERA (30PIN)

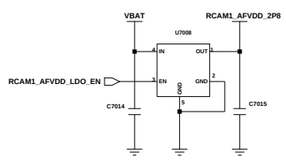

RCAM1 LDO

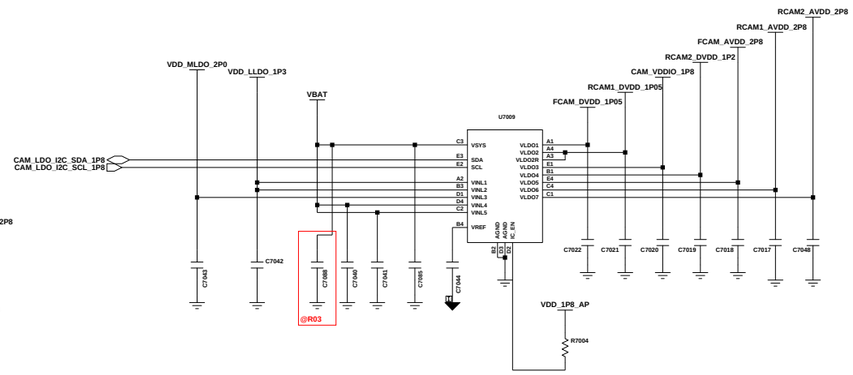

CAM PMIC

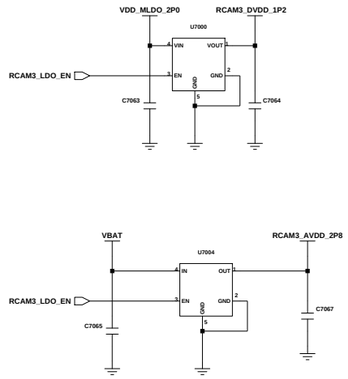

RCAM3 LDO

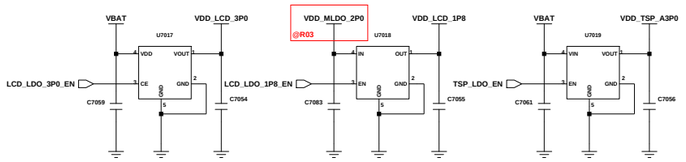

OCTA LDO

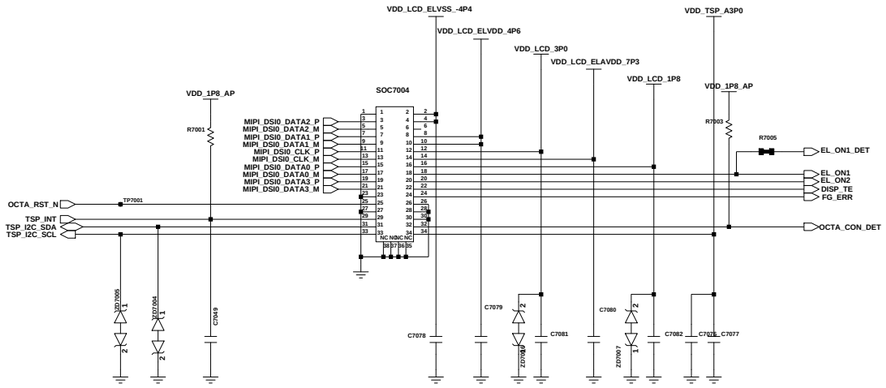

6.38" FHD+ DISPLAY

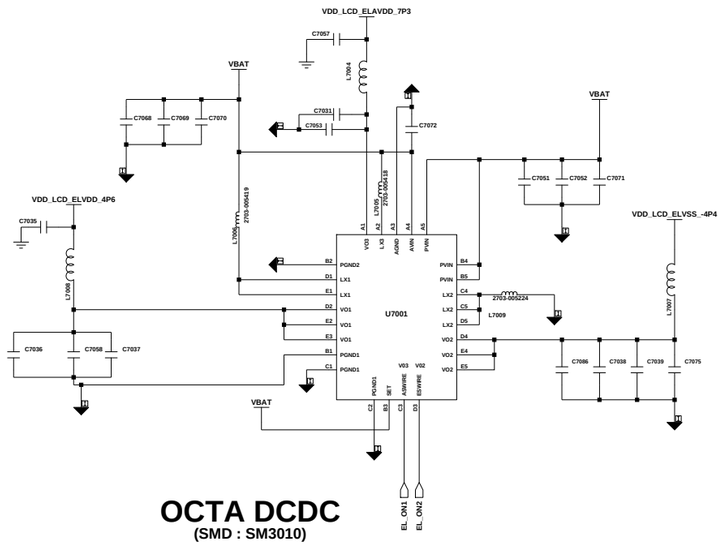

OCTA DCDC
(SMD : SM3010)

Engineer:			
Drawn by:			CAMERA, DISPLAY
R&D CHK:			TITLE: SM-M305M
DOC CTRL CHK:			
MFG ENGR CHK:			
Changed by:	Date Changed:	Time Changed:	QA CHK:

REV | Drawing Number: | Size: | Page: 2/7

SM-M305M
Common

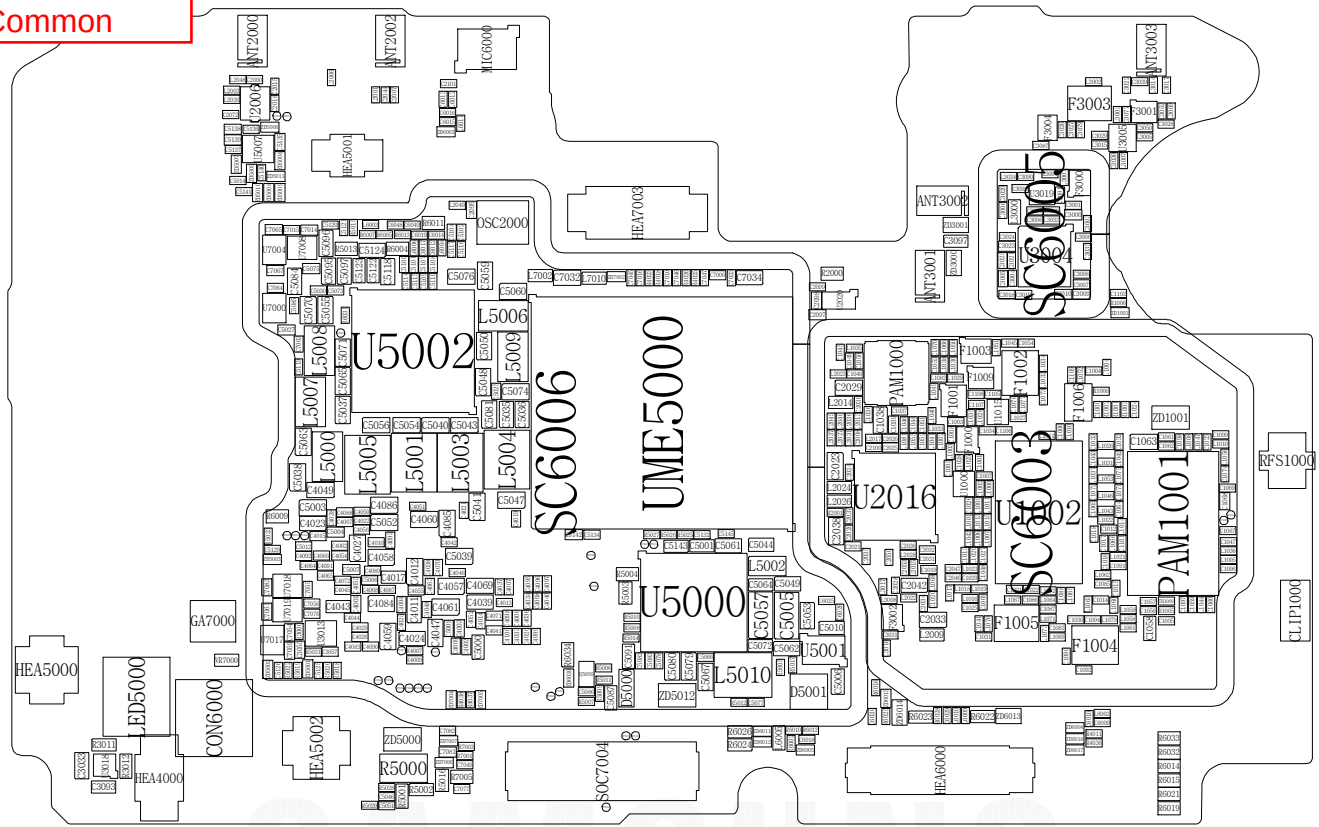
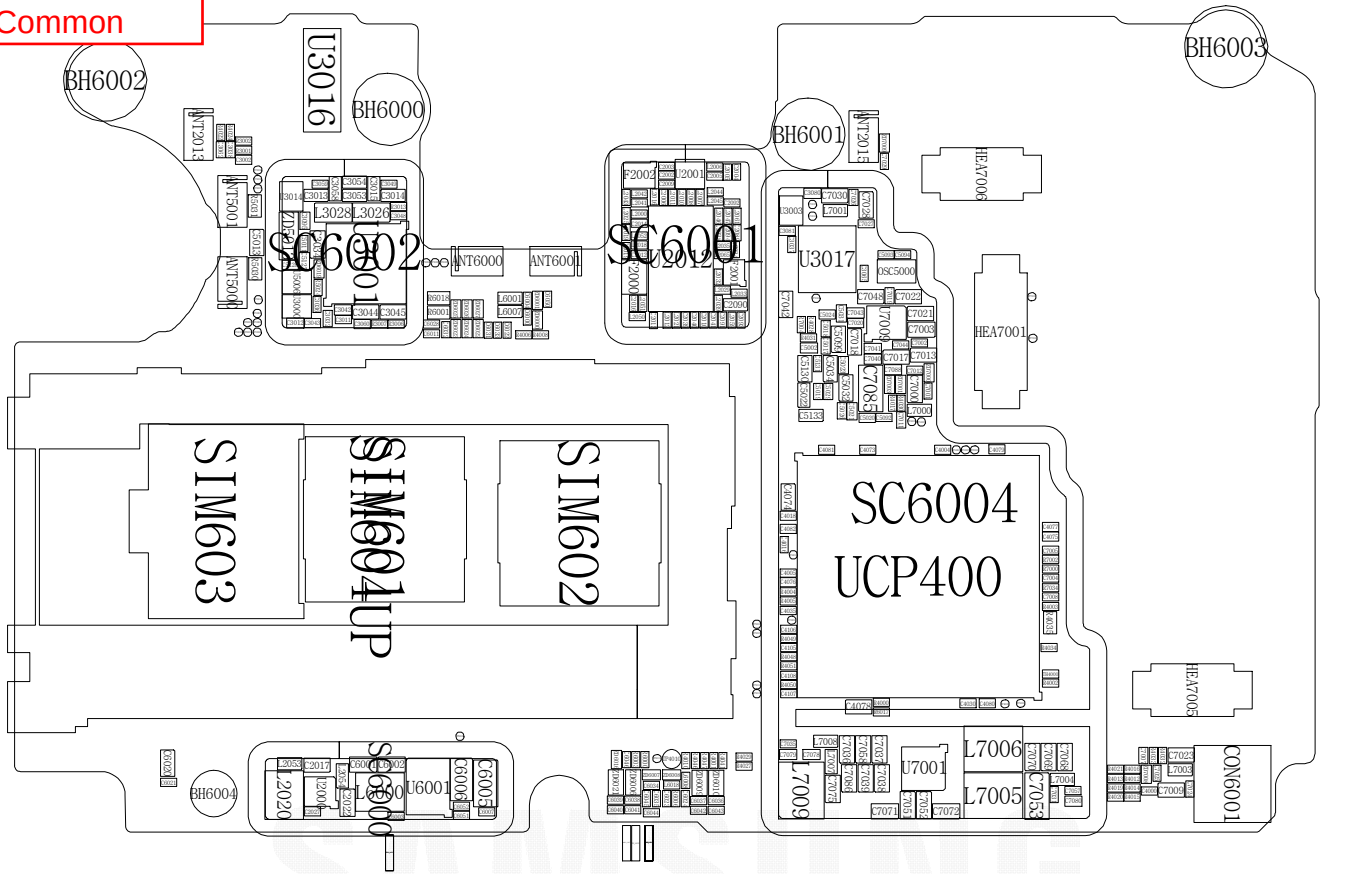
SM-M305M
Common